Journal of the Eastern Asia Society for Transportation Studies, Vol. 6, pp. 372 - 384, 2005

DEVELOPMENT OF TRAIN SCHEDULING MODEL ACCOMMODATING TRANSFER BEHAVIOR

Dong-Kyu KIM
Researcher
Graduate School of Engineering
Seoul National University
San 56-1 Sillim-dong, Gwanak-gu, Seoul, 151-742, Korea
Fax: +82-2-889-0032
E-mail: armbada@lycos.co.kr

Chang-Ho PARK
Professor
Graduate School of Engineering
Seoul National University
San 56-1 Sillim-dong, Gwanak-gu, Seoul, 151-742, Korea
Fax: +82-2-889-0032
E-mail: parkch@gong.snu.ac.kr

Abstract

The purpose of this paper is the development of the operational strategies to maximize the rail network efficiency. The existing schedule optimization model, where the planning objective is operation cost minimization or travel time minimization, is extended to the new model by considering transfer behavior. The transfer penalty is introduced to constraints in the mixed integer nonlinear programming (MINLP) model for the analysis of the alternative with transfer between two types of trains. Because this type of the problem is NP-complete, so branch-and-cut approach, which is widely used for this type problem, is introduced to the solution procedure.
The practical availability of the rail operational strategy in this paper has evaluated and the numerical results show that the schedule model constructed in this paper can product the optimal schedule to utilize the completed rail network efficiently by introducing the transfer penalty into the framework. Afterwards, this study can make the basis of the improved operational strategy consisting of the rail transfer scheduling by including the studies about the more detailed travelers' behaviors.

Key Words: network efficiency, train scheduling, transfer behavior, MINLP, branch-and-cut

1. INTRODUCTION

The opening of HSR (High Speed Railroad) in Korea is expected to bring to the enormous economical and political changes and many related studies have been investigated. Especially it doesn't only mean the addition of the high-speed mode but the completion of the rail network system, so the development of the operational strategies to maximize the rail network efficiency has focused on in the railroad industry.

The completion of the rail network system in Korea can form the basis of overcoming the weaknesses of the rail mode, that is, accessibility and frequency. Because the transfer system in the complete network helps a traveler move to his desirable destination more closely and at his desirable time more accurately. The scheduling plays on a more important role in these operational strategies. The well-designed schedule helps the operating cost reduction and the demand conversion from other modes, thus enhances revenue while miss-specified schedule planning may cause the increase of travelers' disutility. So it is very important to formulate the schedule planning corresponding with the passengers' expectation.

The schedule optimization model is NP-complete, so branch-and-cut approach, which is widely used for this type problem, is introduced to the solution procedure. And the strategy of financial feasibility maximization is established.

The practical availability of the rail operational strategy in this paper has evaluated. The numerical results show that the new model products the optimal schedule which can utilize the network structure efficiently. In the case of the alternative with transfer, the operation of HSR was activated. Although the share of the rail mode is increased, the frequency of railroad is similar but the distance was decreased by 20.7% and it means that the efficiency of train operation was improved.

The schedule model constructed in this paper can product the optimal schedule to utilize the completed rail network efficiently by introducing the transfer penalty into the framework. Afterwards, this study can make the basis of the improved operational strategy consisting of the rail transfer scheduling by including the studies about the more detailed travelers' behaviors.

2. LITERATURE REVIEW

Train scheduling is one of the most challenging and difficult problems in railway planning. So it has been done manually for more than a century through a trial and error process. There have been many studies of more efficient scheduling methods - simulation, mathematical programming, expert systems and so on.

The fundamental base of the train schedule is the single line plan which determines the number of trains serving the line connecting two terminal stations in a fixed time interval (Bussieck et al., 1997). Many researchers have tried to solve the realistic problems by adding various constraints and conditions on this basis.

Morlok and Peterson (1970) are known as one of the earliest work on an optimum solution to the train-scheduling problem. The objective is to minimize the sum of fixed costs for trains, variable costs for transportation, handling and storage of freight, and opportunity costs of using rail equipment, while providing on-time deliveries of time-sensitive goods. Each potential train has a departure time, routing, set of stops, and an upper limit on cars. Decisions are which trains to operate and which freight to assign to each train. The authors apply branch-and-bound to solve a small instance of the resulting multi-commodity network design problem.

Jovanovic and Harker (1991) developed the SCAN-I model to construct timetable and pass plans with a focus on robustness against travel time randomness. They employed a branch-and-bound variant called a process-interaction simulation to assess whether a timetable is feasible under deterministic assumptions. Whenever a feasible schedule is identified for the deterministic travel times, simulation is used to estimate the probability that the schedule is achievable for random travel times.

Kraay et al. (1991) constructed MINLP problem for variable velocity while Jovanovic and Harker (1991) formulated a mixed integer problem for fixed velocity. The objective is to minimize train delays and fuel costs and resulting model permitted more flexibility in scheduling and fuel cost reductions.

Kraay and Harker (1995) developed real-time scheduling model of freight railroads to provide a link between strategic schedules and line dispatching or CAD (Computer Assisted Dispatching) models.

Carey and Lockwood (1995) presented a timetabling problem on a single rail line assuming a constant velocity for each train. They constructed the timetable and schedule to minimize total weighted delay subject to maximize train velocity and siding length.

Table 1. Literatures of Train Scheduling and Routing

Paper/Year	Decisions	Major Assumptions	Objective Function	Constraints
Morlok & Peterson (1970)	Train schedules & freight routes	-Deterministic demand and transit times	Minimize fixed and variable operating, storage and opportunity costs	-Delivery windows -Power requirements -Train capacity
Jovanovic & Harker (1991)	Detailed train timetables, meet-pass plans	-Fixed velocity -Travel times uncertain	High probability of feasibility	-Deadlock avoidance -Siding capacity
Kraay et al. (1991)	Train velocity profile & meet-pass plans	-Single track -Variable velocity	Minimize fuel consumption, deviation from schedule	-Maximum train velocity
Carey & Lockwood (1995)	Train paths and schedules	-One-way traffic -Fixed velocity	Minimize deviations from preferred departure time	-Arrival & departure time windows
Marín & Salmerón (1996)	Train routes and car routing	-Deterministic transit times -Constant demand	Minimize fixed and variable transit, holding, handling, and investment costs	-Demand satisfaction -Yard, line, and train capacity -Limited cars on track
Nozick & Morlok (1997)	Assign equipment and loads to trains	-Fixed train schedules -Known demands	Minimize costs of repositioning and satisfying demand	-Demand Satisfaction -Fleet size -Terminal capacity
Kwon et al. (1998)	Car routing	-Train schedules, block definitions, fixed block to train assignments -Time-varying demand	Minimize late delivery penalties	-Train capacity -Correct car to block, block to train assignment
Van Dyke (1999)	Assignment of cars to blocks	-Existing blocking plan -Train Scheduling fixed -Constant demand	Minimize transportation and handling costs	-Demand satisfaction
Newman & Yano (2000)	Train schedules and freight routes	-Deterministic transit times -Time-varying demand	Minimize fixed and variable operating and storage costs	-Freight due dates -Train and line capacity
Chang et al. (2000)	Train schedules, service frequency, fleet size and passenger volume	-Constant demand and capacity -Train stopping time -Fixed and published timetable	Minimize the total operating costs **or** the total travel time loss (multi-objective)	-Train and line capacity -Demand satisfaction -Fleet size
Ghoseiri et al. (2004)	Train schedules routing, and average velocity	-Decomposition of the complicated infrastructures -Predetermined platform capacity -Average velocity	Minimize the fuel consumption cost **or** travel time (multi-objective)	-Train movement continuity -Events continuity -Trip times on links and dwell times at platform -Headway avoiding conflicts

Higgins et al. (1996) described the development of a model designed to optimize train schedules on single line rail corridors. The objective of the paper is to present a lower bound that will allow the branch and bound procedure to find the optimal solution to realistic size problems in reasonable time.

Marín and Salmerón (1996) addressed an aggregate steady-state freight planning model in which train routes (including stops), their frequency, and the number of cars using each service are determined. Costs include a fixed charge for each train, handling and delay costs, and costs of investments in additional trains. Constraints are imposed on the number of cars transported on each track segment, the number of cars using each yard, and the number of trains. They suggest heuristics in which service frequency decisions are handled by simulated annealing or tabu search and freight routing is addressed using a network flow model.

Nozick and Morlok (1997) addressed a finite-horizon, discrete-time problem of minimizing the total variable cost of moving loaded and empty trailers and flatcars given a fixed train schedule while satisfying due dates. They developed a procedure that involves iteratively solving a linear programming relaxation and rounding some of the resulting fractional values until a feasible integral solution is found.

Kwon et al. (1998) formulated a multi-commodity flow problem to determine car routes assuming the train schedule-blocking plan and block-to-train assignments are given. The goal is to minimize late delivery penalties while ensuring demand is met, cars are appropriately assigned to blocks, blocks are appropriately assigned to trains, and train capacity restrictions are enforced. They use a column generation approach to solve realistic problem instances. This model has proved useful for modifying train schedules when the initial train schedule does not provide adequate customer service.

All major North American railroads currently use MultiRail software assigns railcars to existing blocks. The objective is to minimize variable transportation and handling costs incurred for all transit segments, but costs may be modified to reflect routing preferences. Block and yard capacities are not explicitly modeled, allowing car routing to be determined using a shortest-path algorithm (Van Dyke, 1999).

Newman & Yano (2000) presented both centralized and decentralized approaches for solving the discrete-time problem of simultaneously deciding train service on all possible nonstop links and freight allocation. They considered deterministic transit times and time-varying demand to minimize fixed and variable operating and storage costs.

Chang et al. (2000) gave a multi-objective model for passenger train services planning. They determined the optimal allocation of passenger train services on an inter-city high-speed rail line without branches with specifying subset of stations at which the train must stop. This model belongs to the line-planning category of the hierarchical planning process.

Ghoseiri et al. (2004) also developed a multi-objective model for the passenger train-scheduling problem on a railroad network that includes single and multiple tracks and multiple platforms. The objective is to minimize the fuel consumption cost or total passenger time subject to the train movement continuity constraints, events continuity constraints and trip time and dwell time constraints and so on.

3. MODEL FORMULATION

The distinct planning decisions of providing passenger train services on an intercity HSR line can be hierarchically structured as in Fig. 1. The classification of decision levels is based on the framework proposed by Anthony (1965). It is composed of strategic, tactical and operational decisions. This paper focuses on the development of an optimal model for train services planning to support major tactical decisions.

Tactical decisions include demand variation, fleet size, service frequency, stop-schedule plan and so on. Tactical decision is the core of the rail operational planning, but it is very difficult and complicated, so most problems are solved by application of the simulation methods. This paper focuses on the development of the train scheduling model accommodating transfer behavior.

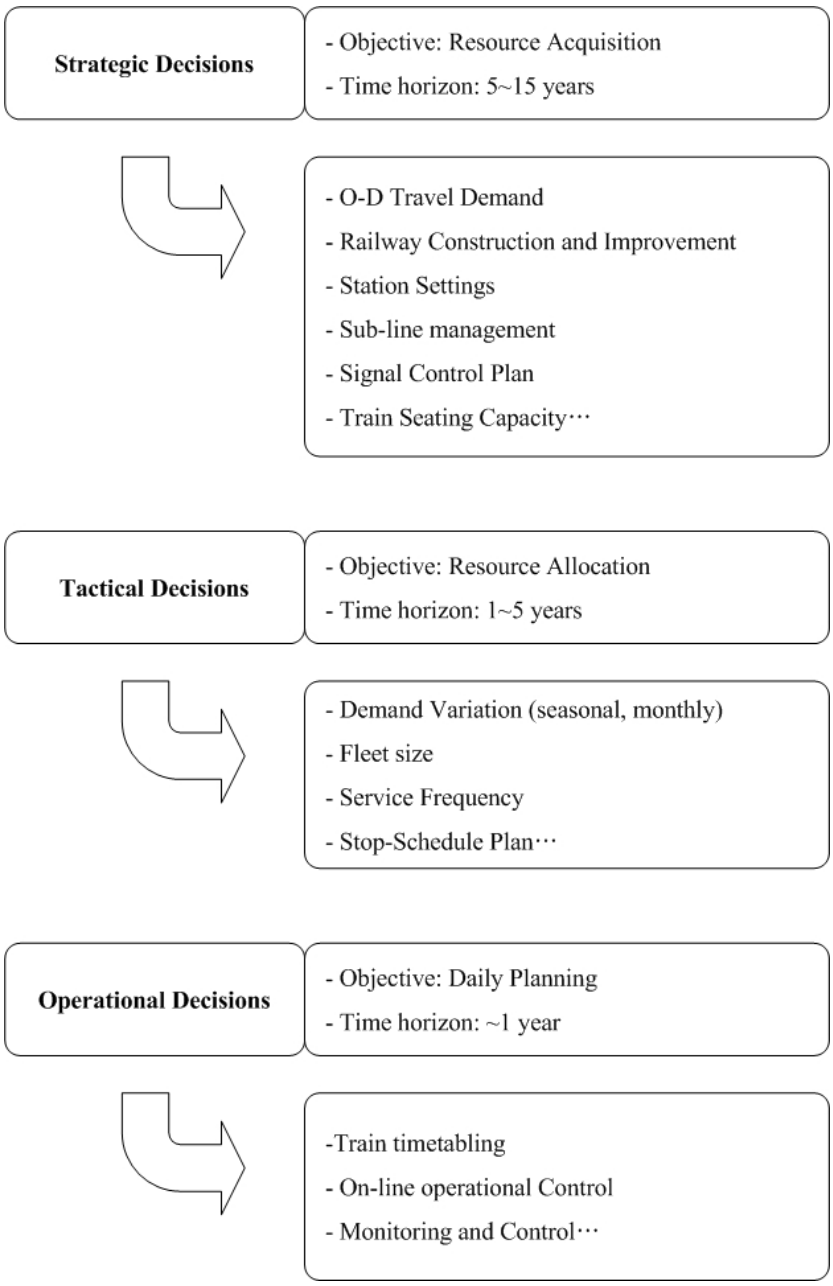

Figure 1. Hierarchical Structure for Passenger Train Services plan

The summary of notation in this paper is follows.

p_r : fare on a stop schedule r
z_{itr} : passengers on board at station i on a stop schedule r during an operating period t
Q_{ijt} : total travel demand, which is dependent on fare (p_r) and frequency (f_{tr})
v_{ijtr} : passengers volume from stations i to stations j served by each stop-schedule r
d_{tr} : total trip distance of all train trips based on a stop schedule r during an period t
L_{ij} : the distance between station i and station j
x_{itr} : if a train on the stop schedule r stops at a station i, then $x_{itr} = 1$; otherwise, $x_{itr} = 0$
$y_{\tau tr}$: if a train on the stop schedule r transfers at a station τ, then $y_{\tau tr} = 1$; otherwise, $y_{\tau tr} = 0$
E_t : the maximum number of trains during a period t
K_{tr} : the seating capacity on a stop schedule r during a period t
A_{tr} : the number of trains required due to running time
B_{itr} : the number of trains required due to dwell time
U_{si} : running time from station s to station i
W_i : dwell time at a station i
ϕ_r : transfer time at a station τ
C_f , C_v : fixed overhead cost and variable operating cost
T , R : the number of operating periods and stop schedules, respectively
N : the number of stations
M : a large number

3.1 Objective Function and Constraints

On a passenger train service line with a set of N stations $\Omega = \{1,2,\cdots,N\}$, train trips are provided by n trains on a set of R stop-schedules within a planning horizon T. The travel demand Q_{ijt} of many-to-many O-D for an operating period t ($t \in \{1, 2, \cdots, T\}$) is dependent on the fare and frequency.

The objective function (1) is the profit maximization problem. This includes total revenue and total fixed/variable costs. Constraints (2) specify z_{itr}, which is the passengers on board at a station i on a stop-schedule r. Constraints (3) define the total trip distance d_{tr}, which is obtained by multiplying the distance and service frequency. Constraints (5) and (6) specify the conditions for constructing a stop-schedule r and constraints (7) ensure that no passenger can board or alight at station i, if a stop-schedule r does not stop at station i (where x_{itr} = 0).

Constraints (8)~(10) specify the line and seating capacity of train trips on the stop-schedule r. Constraints (11) and (12) present that passenger can transfer at station τ if $U_{i\tau} + U_{\tau j} + \phi_\tau$ is smaller than U_{ij}. n in constraints (13) is the minimum required fleet size and constraints (14) and (15) are defined for (13).

Objective

$$\text{Maximize } \Pi = \sum_{i=1}^{N}\sum_{t=1}^{T}\sum_{r=1}^{R}\left[p_r z_{itr} - \left(C_f n + C_v d_{tr}\right)\right] \tag{1}$$

Subject to

$$z_{itr} \geq \sum_{p=s}^{i-1}\sum_{q=i+1}^{N} v_{pqtr} + \sum_{q=i+1}^{N}\sum_{p=s}^{i-1} v_{qptr} - M(1-x_{itr}); \quad i = s+1, \cdots, N-1 \tag{2}$$

$$d_{tr} \geq 2L_{ij} f_{tr} - M(1-x_{itr}); \quad i \neq j \text{ And } i, j \in \Omega \tag{3}$$

$$Q_{ijt}(p_r, f_{tr}) - \sum_{r=1}^{R} v_{ijtr} \geq 0; \quad i, j \in \Omega \tag{4}$$

$$\sum_{i=s+1}^{N} x_{itr} \leq (N-s)x_{str} \tag{5}$$

$$f_{tr} \leq M x_{str} \tag{6}$$

$$\sum_{j=1}^{N} v_{ijtr} + \sum_{j=1}^{N} v_{jitr} \leq M x_{itr}; \quad i = s, \cdots, N \tag{7}$$

$$\sum_{r=1}^{R} f_{tr} \leq E_t \tag{8}$$

$$\sum_{p=s}^{i-1}\sum_{q=i}^{N} v_{pqtr} \leq K_{tr} f_{tr}; \quad i = s+1, \cdots, N \tag{9}$$

$$\sum_{p=s}^{i-1}\sum_{q=i}^{N} v_{pqtr} \leq K_{tr} f_{tr}; \quad i = s+1, \cdots, N \tag{10}$$

$$v_{i\tau} + v_{\tau j} \geq 2v_{ij} - M(1-y_{\tau tr}); \quad j \neq 1 \text{ And } \tau = i+1, \cdots, j-1 \tag{11}$$

$$U_{ij} - \left(U_{i\tau} + U_{\tau j} + \phi_\tau\right) \geq -M(1-y_{\tau tr}); \quad j \neq 1 \text{ And } \tau = i+1, \cdots, j-1 \tag{12}$$

$$n \geq \sum_{r=1}^{R}\left(A_{tr} + \sum_{i=s+1}^{N-1} B_{itr} + \phi_r f_{tr}\right) \tag{13}$$

$$A_{tr} \geq 2U_{si} f_{tr} - M(1-x_{itr}); \quad i = s+1, \cdots, N \tag{14}$$

$$B_{itr} \geq 2W_i f_{tr} - M(1-x_{itr}); \quad i = s+1, \cdots, N-1 \tag{15}$$

3.2 Model Solution Procedure

The solution procedure in this paper can be solved by branch-and-cut methods, which are exact algorithms consisting of a combination of a cutting-plane method with a branch-and-bound algorithm.

These methods work by solving a sequence of relaxations of the integer-programming problem. Cutting-plane methods improve the relaxation of the problem to more closely approximate the integer-programming problem. For this procedure, some linearization processes are required but there are many linearization methods are well known so we will skip about the details.

A branch-and-cut algorithm is outlined below. L is the set of active nodes in the branch-and-cut tree. The value of the best-known feasible point for the integer linear problem (ILP) is $\bar{z}$, which provides and upper bound on the optimal value of the original problem. z^l is a lower bound on the optimal value of the current subproblem. The value of LP relaxation of the subproblem is used to update z^l.

The efficiency of the procedure is highly dependent upon efficiently finding sets of "strong" inequalities. The problem of finding a violating inequality or proving that no such inequality exists for solution x^{lR} is commonly referred to as the "separation problem". Ideally, an efficient exact method to solve the separation problem (Step 5) is required. Unfortunately, such methods are usually unavailable, so the cutting planes are sorted in order of the magnitude of violation and added to a subset.

Step 1. Initialization: Denote the initial integer programming problem by ILP^0 and set the active nodes to be $L = \{ILP^0\}$. Set the upper bound to be $\bar{z} = +\infty$. Set $z^l = +\infty$ for the one problem $l \in L$.

Step 2. Termination: If $L = \varnothing$, then the solution x^*, which yielded the incumbent objective value $\bar{z}$, is optimal. If no such x^* exists (i.e., $\bar{z} = +\infty$), then ILP is infeasible.

Step 3. Problem selection: Select and delete a problem ILP^l form L.

Step 4. Solve the linear programming relaxation of ILP^l. If the relaxation is infeasible, set $z^l = +\infty$ and go to Step 6. Let z^l denote the optimal objective value of the relaxation if it is finite and let x^{lR} be an optimal solution; otherwise set $z^l = -\infty$.

Step 5. Add cutting planes: If desired, search for cutting planes that are violated by x^{lR}; if any are found, add them to the relaxation and return to Step 4.

Step 6. Fathoming and Pruning

(a) If $z^l \geq \bar{z}$ go to Step 2.

(b) If $z^l < \bar{z}$ and x^{lR} is integral feasible, update $\bar{z} = z^l$, delete from L all problems with $z^l \geq \bar{z}$, and go to Step 2.

Step 7. Partitioning: Let $\{S^{lj}\}_{j=1}^{j=k}$ be a partition of the constraint set S^l of problem ILP^l. Add problems $\{ILP^{lj}\}_{j=1}^{j=k}$ to L, where ILP^{lj} is ILP^l with feasible region restricted to S^{lj} and z^{lj} for $j = 1, \cdots, k$ is set to the value of z^l for the parent problem l. Go to Step 2.

4. APPLICATION

4.1 Sample Network

In this section, we present a simple numerical example to illustrate the model and the solution methods. We have studied the analysis including the mode choice procedures to consider demand diversion from auto mode.

The rail network used in this example has 7 stations and 6 sections. In the Fig. 2, HSR can be only operated on the bold line (5 stations and 4 sections). For the simplicity, it was assumed that all tracks are double lines without sidings. The railroads are served all stations, but HSR are only served the stations B~F. Transfer between HSR and railroad is achieved at the station B and F.

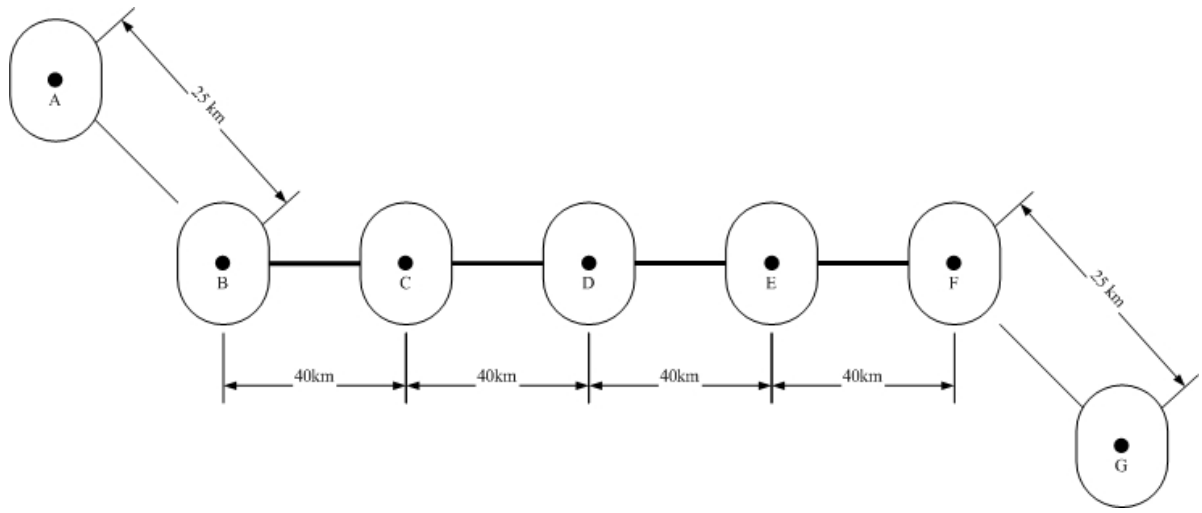

Figure 2. A Sample Network Example

The trip demand T_{ijt} between zone i and j during an operating period t vary between 3,500 ~ 15,000 passengers/hr and are divided with auto users and rail passengers. The mode choice models are follows.

$$Q_{ijt} = \frac{T_{ijt}}{1 + e^{U_{aij} - U_{rij}}} \tag{16}$$

$$U_{aij} = \beta_1 TT_{aij} + \beta_2 CT_{aij} \tag{17}$$

$$U_{rij} = \beta_1 TT_{rij} + \beta_2 CT_{rij} + \beta_3 TW_{rij} + \delta \tag{18}$$

T_{ijt} : total travel demand from zone i to zone j during an operating period t

Q_{ijt} : rail passengers demand from zone i to zone j during an operating period t

U_{aij} : an auto user's utility function from zone i to zone j

U_{rij} : a rail passenger's utility function from zone i to zone j

TT_{mij} : travel time of mode m from zone i to zone j

CT_{mij} : travel cost of mode m from zone i to zone j

The values of the parameters $\beta_1, \beta_2, \beta_3$ and δ were -0.0411, -2.24, -0.1 and 4.77 respectively, which were adopted from Domencich and McFadden (1975). The planning horizon period is 6 hrs and two types of trains - HSR and railroad - are operated. Details of the example are in the Table 2.

Table 2. Items and Values by Alternatives for Examples

Alternative	Item		Value
Auto	Vehicle Occupancy		2.2 person/car
	Speed		60km/hr
	Operating Cost		5.5$/veh-hr
Rail	Capacity	HSR	900 seats/train
		Railroad	600 seats/train
	Train Speed	HSR	200km/hr
		Railroad	100km/hr
	Operating Cost	HSR	1.375$/km
		Railroad	1.042$/km
	Line Capacity		12 trains/hr
	Access Time		10min
	Dwell Time		5min/station
	Transfer time		15min/station

4.2 Analysis of the Optimal Train Service Plan

In this section, the train service plans for the example are constructed. Two optimal scheduling solutions are compared, in which one is with transfer and the other is without.

Just as expected, in the case of the alternative with transfer, the frequency and distance of the HSR was increased. Especially, the distance of HSR was increased by 31.9%, and it means that the operation of HSR was activated. Although the share of the rail mode was increased (14.0% $\rightarrow$ 17.3%), the frequency of railroad was similar but the distance was decreased by 20.7% and it means that the efficiency of train operation was improved.

Table 3. Computational Results for the Alternatives

Alternative		With Transfer	Without Transfer
Frequency (Distance)	HSR	8 (1530km)	6 (1160km)
	Railroad	21 (1650km)	22(2080km)
Profit		3603.7$	2991.3$
Operating cost		3862.5$	4068.3$
Share of rail mode		17.3%	14.0%

The schedules of the alternatives are depicted in the Fig. 3 and Fig. 4. As shown in the Fig 3 and Fig. 4, in the case of the alternative with transfer, the frequency was increased at the O-D pairs where had many passengers by transfer, so the waiting time was decreased. Additionally, the frequencies of the section A~B and B~C were increased, and the frequency of railroad was decreased but HSR was increased.

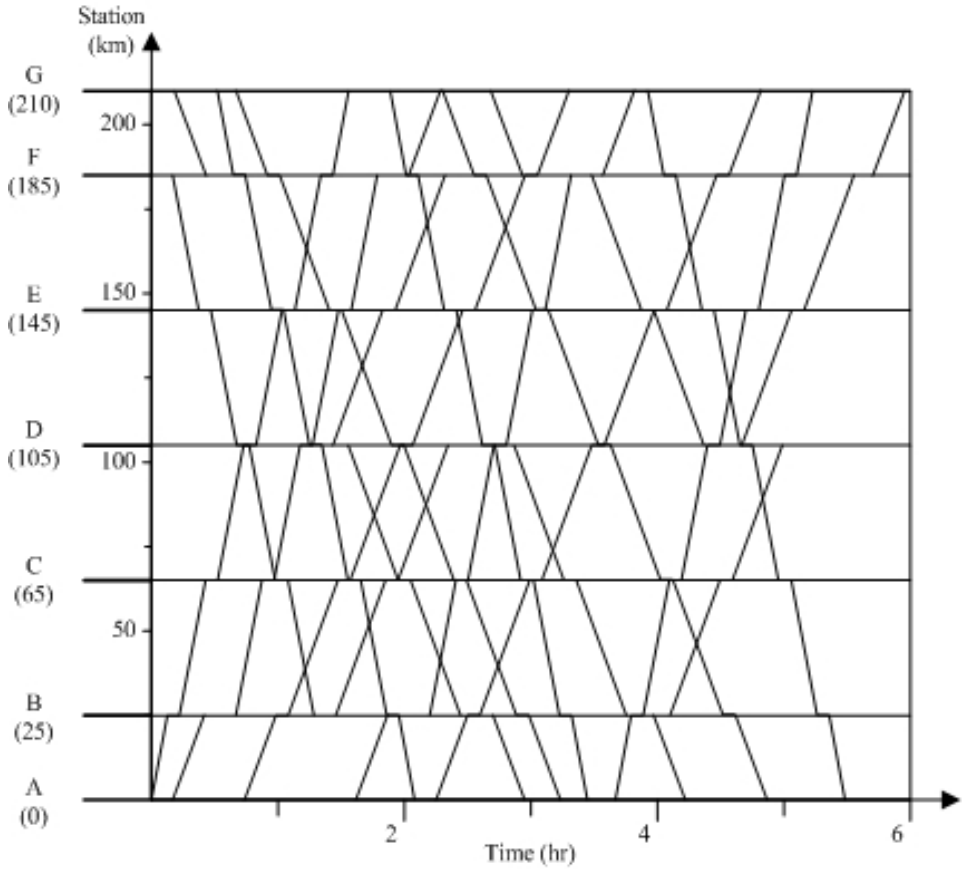

Figure 3. Optimal Schedule with Transfer

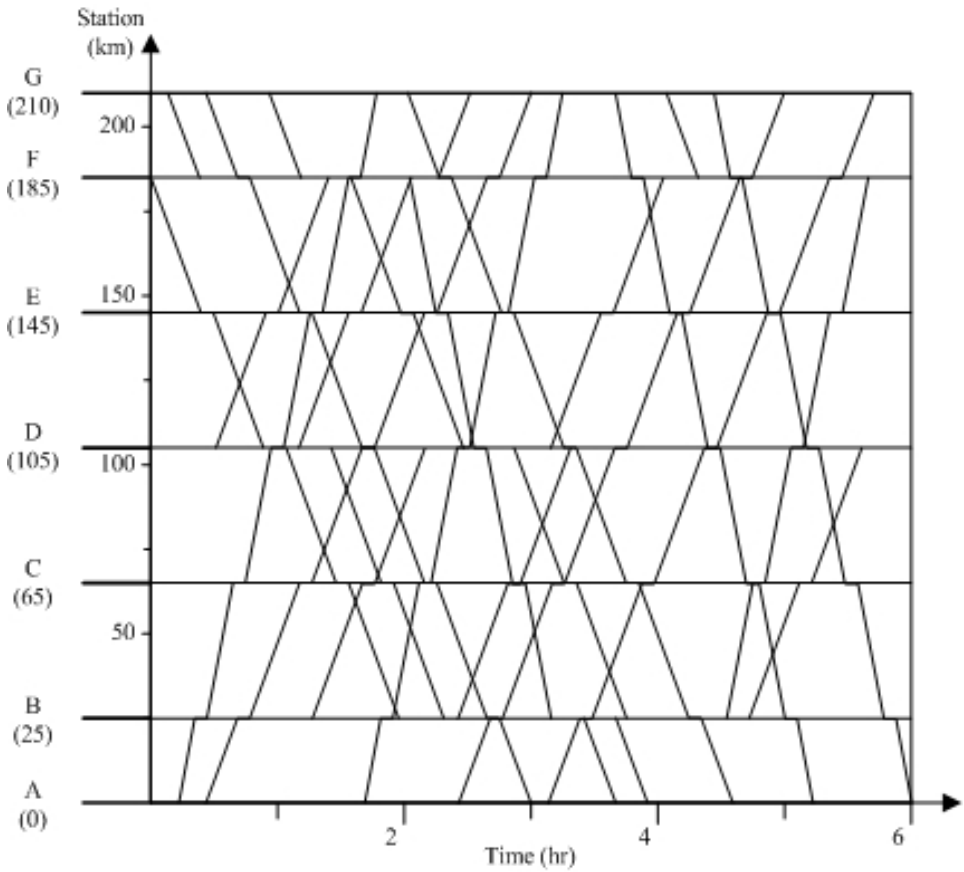

Figure 4. Optimal Schedule without Transfer

Only a few transfer alternatives were included in the optimal solution, and it shows most travelers have the tendency to choose the direct alternatives rather than the transfer in the present fare and service system. The reduced transfer penalty can improve the system efficiency, so we can infer the necessity of the transfer discount and convenience facility. The additional analysis shows the introduction of the discount in the spare capacity period also can improve the system efficiency.

5. CONCLUSIONS

The schedule model constructed in this paper can product the optimal schedule to utilize the completed rail network efficiently by introducing the transfer penalty into the framework. Just as expected, in the case of the alternative with transfer, the frequency and distance of the HSR was increased while the operating cost was decreased. Especially, the distance of HS was increased by 31.9% and it means that the operation of HSR was activated. Additionally the share of the rail mode was increased and the efficiency of train operation was improved.
Afterwards, this study can make the basis of upgrade operational strategy consisting of the rail transfer scheduling by including the studies about the more detailed travelers' behaviors.

6. ACKNOWLEDGMENT

The authors would like to express their sincere gratitude to Engineering Research Institute SNU by which they are supported, for giving them the opportunity to carry out this paper.

REFERENCES

Bussieck, M.R., Winter, T., and Zimmermann, U.T. (1997) Discrete optimization in public rail transport, **Mathematical Programming 79**, 415-444.

Caccetta, L. and Hill, S.P. (2001) Branch and Cut Methods for Network Optimization, **Mathematical and Computer Modelling 33,** 517-532.

Carey, M. (1998) Optimizing scheduled times, allowing for behavioral response, **Transportation Research Part B. Vol.32, No.5**, 329-342.

Carey, M., and Carville S. (2003) Scheduling and platforming trains at busy complex stations, **Transportation Research Part A. Vol.37, No.3**, 195-224.

Chang, Y. H., Yeh, C. H. and Shen, C. C. (2000) A Multiobjective model for passenger train services planning: Application to Taiwan's high-speed rail line, **Transportation Research Part B, Vol. 34, No. 2**, 91-106.

Dantzig, G. B., Fulkerson, D. R. and Johnson, S. M. (1954) Solution of a large scale traveling salesman problem, **Operations Research 2**, 393-410.

Ghoseiri, K., Szidarovszky, F. and Asaharpour M. J. (2004) A multi-objective train scheduling model and solution, **Transportation Research Part B, Vol. 38, No. 10**, 927-952

Jovanovic, D., and Harker, P.T. (1991) Tactical scheduling of rail operations: the SCAN-I system, **Transportation Science. Vol.25**, 46-64.

Kesavan, P., and Barton, P.I. (2000) Generalized Branch-and-cut framework for mixed-integer nonlinear optimization problems, **Computer and Chemical Engineering 24**, 1361-1366.

Kraay, D. and Harker, P.T. (1995) Real time scheduling of freight railroads, **Transportation Research Part B**, **Vol. 29B, No. 3**, 91-107.

Kraay, D., Harker, P.T., and Chen., B.T. (1991) Optimal pacing of trains in freight railroads: model formulation and solution, **Operation Research 39**, 82-99**.**

Kwon, O. K., Martland, C.D. and Sussman, J.M. (1998) Routing and scheduling temporal and heterogeneous freight car traffic on rail networks, **Transportation Research Part E. Vol.34E, No.2**, 101-115.

Luenburger, D.G. (1973) **Introduction to Linear and Nonlinear Programming.** Addison-Wesley publishing company, Massachusetts.

Marín, A. and Salmerón, J. (1996) Tactical design of rail freight networks – Part I: Exact and heuristic methods, **European Journal of Operation Research. Vol.90**, 26-44.

Morlok, E. K. and Peterson, R. B. (1970) Final report on a development of a geographic transportation network generation and evaluation model, J. **Transportation Research Forum 11,** 71-105.

Newman, A. and Yano, C. A. (2000) Centralized and decentralized scheduling for intermodal operations, **IIE Transactions 32**, 743-754.

Nozick, L. K. and Morlok, E. K. (1997) A model for medium-term operations planning in an intermodal rail-truck service, **Transportation Research Part A**, 91-107.

Pardalos, P.M. and Resende, M. G. C. (2002) **Handbook of Applied Optimization.** Oxford University Press, New York.

Van Dyke, C. D. (1999) Algorithm-based blocking plan analysis. Working Paper. **MultiModal Applied Systems**.