Relationships among Major Container Ports in Asia Region

Chao-Hung CHIANG
Ph. D. Student
Institute of Traffic and Transportation
National Chiao Tung University
3F, 118 Chung Hsiao W. Rd., Sec. 1, Taipei, Taiwan
Fax: +886-2-23494953
E-mail: clairchiang.tt93g@nctu.edu.tw

Cherng-Chwan HWANG
Professor
Institute of Traffic and Transportation
National Chiao Tung University
4F, 118 Chung Hsiao W. Rd., Sec. 1, Taipei, Taiwan
Fax: +886-2-23494953
E-mail: cch@mail.nctu.edu.tw

Abstract: Significant changes in the shipping market cause port authorities facing new challenges and opportunities. Container traffic to and from other parts of Asia is expected to grow more rapidly than the world average, and the intra-Asian trade in particular will continue to outperform global container growth. The purpose of this paper is to explore the relationships among major Asia ports based on the historical port throughput data by using a set of time series analysis. The results would assist port authorities concerned in understanding the port position and managing the partners. The findings indicate that there were no long-term equilibrium relationship existed among Asia ports, but short-term relationships did exist among them. Through generalized forecast error variance decomposition, it is found that many of these ports can explain the variance with each other which may help port authorities to gain more insights about the sources of errors in throughput forecasting.

Key Words: *Container Ports, Cointegration Test, Granger Causality Test, Generalised Forecast Error Variance Decomposition*

1. INTRODUCTION

Significant changes in the structure of the container shipping market causes shipping companies and port authorities facing new challenges and opportunities. Therefore, understanding the relationship among ports would help port authorities to make proper decisions. In the past, relationships among ports usually were qualitatively discussed in terms of their geographic locations. Although geographic location is an important factor, it can't quantify the interactions among ports. Recently, several studies have tried to use quantitative data, namely the port throughput, to explore the ports relationship by using a set of time series methods. Throughput of an international container port consisted of two types of cargoes. The first type is the imported and exported cargoes of a port, which is destinated to or originated from the hinterland of the port, hence also referred as O-D cargoes. The amount and distribution pattern of this type of cargoes is largely depended on these factors, such as economic development, structure of industries, trading inter-dependency of the hinterlands etc.. The second type is the transshipment cargoes, which is largely depended on the specific conditions of a port, such as geographic location, infrastructures and equipments, service quality and efficiency etc., as well as operating strategies of major shipping companies. For O-D cargoes of a specific pair of ports, throughput change in one port would result in same amount of change in the other port. Whereas the interactions of a specific pair of ports due to transshipment cargoes is more complicated. Theoretically, rigorous analysis of ports' relationship can be made on the basis of the statistical data of cargoes flows among ports. But these kinds of data are very difficult to collect, which even do not existed in the data base

system of Taiwan's ports. That could be the main reasons that total throughputs of ports were used for analysis by those recent studies. It is implicitly assumed that most influence factors of port relation can be reflected by the port throughput which makes the throughput to be a representative index.

The intra-Asian trade will continue to outperform global container growth. It is very difficult to draw a comprehensive picture of the intra-Asian container flows due to lack of available data as was described. Therefore, this study follows the same assumptions, and uses similar time series analysis methods to address the problem. Major container ports selected in the scope of this study include Shanghai (SHA), Shenzhen (SZA) and Hong Kong (HKG) in China, Busan (BUS) in South Korea, Kaohsiung (KAO) in Taiwan, and Singapore (SGP).These ports were selected because six of them are all listed within the top ten largest container ports in the world, and are located in different major Asian countries. Yokohama was included with consideration that Japan is an important country in Asia, and the throughput of Tokyo port is not available. Historical data of throughputs from 2000/1/1 to 2007/12/31 for each of these ports were collected for empirical analysis of this study, which mainly obtained from each port authority, except that of Shanghai and Shenzhen, were collected from internet of china shipping gazette.

It is hypothesized that if there is a statistically significant connection between the ports, time series analysis can identify the nature of the phenomenon represented by the sequence of observations. This study uses cointegration to test whether long-term equilibrium relationship and short-term dynamic relationship existed in these ports. Granger causality test is used to detect the nature of causality between pair of ports. Furthermore, in order to explore the other ports' reaction when one port changed in throughput, the generalised forecast error variance decomposition is used. It can estimate the percentage of the variance of the error made in forecasting a variable (throughput of one port) due to a specific shock (an unexpected change in port throughput) at a specific time horizon of other ports.

The rest of this paper is organized as follows: Section 2 describes the change in shipping market and port development. Section 3 is a brief review of the literature both on relationship between ports and the application of time series analysis. Section 4 describes methodology used in this study and section 5 presents results of empirical analysis. Finally, concluding remarks are made in section 6.

2. CHANGES IN SHIPPING MARKET AND PORT DEVELOPMENT

The global container shipping market can be divided into three major sub-markets; namely intra-regional, east-west and north-south, and the market share were 39.1%, 43.7% and 17.2%, respectively in 2006 (Chiou,2007). The distribution of intra-regional container flow volume as shown in Table 1 indicates that Asia accounted for more than 72% of the total intra-regional container flows, which was about 28% (39%×72%) of the global total.

Table1 Distribution of intra-regional container flows

Intra-regional	Flow Volume (%)
Asia	72.43
Europe	19.00
North America	3.40
Mid-East	0.50
Latin America	2.23
South Asia	0.32
Africa	1.08
Australasia	1.04

Source: Chiou, 2007

Table 2 provides the information about growth in carrying capacity between Asian routes during 2002-2008. It reveals there was a rapid growth between East Asia and South East Asia from 2002 to 2008. Economic and Social Commission for Asia and the Pacific (UNESCAP, 2005) also pointed out that within the intra-Asian trades, growth of trade to and from East Asia and South Asia hold out great promise for the future. Exports from North Asia are expected to grow more slowly, due largely to subdued growth in containerized exports from Japan. Furthermore, North East Asia's share of imports is also expected to fall, but to a less marked extent. Solid growth is expected in South East Asia, and the South East Asian countries are expected to increase their share of the global total.

Table 2 Carrying capacity of ship fleet by routes

Route / Year	East Asia- North East Asia (TEU)	East Asia- South East Asia (TEU)
2002	568,719	521,946
2004	761,466 (33.89%)	526,839 (0.93%)
2006	2,045,666 (168.64%)	1,938,393 (267.92%)
2008	2,026,273 (-0.94%)	2,046,344 (5.56%)
Total Growth Rate (%)	256.28%	292.06%

Source: China shipping gazette

Many developing countries in Asia, China especially, have exhibited a strong economic growth pattern. Taking port of Shanghai in 2006 as an example, there were 2,173 calling frequency of ships in a month from 978 international liners covering almost 200 countries and 300 ports around the world. Just three years ago, the calling frequency of ships in Shanghai was only 1,490 per month. Furthermore, Chinese ports accounted for approximately 28.4 percent of the total world container port throughput in 2007(UNCTAD, 2008).

Table 3 shows the total growth rate and average growth rate in throughput for each of the main ports selected in this study. It reveals that Shenzhen grew the most and the next was Shanghai in the past eight years. Only China's ports had achieved double-digit growth rates during 2000-2007, whereas the growths in Hong Kong, Kaohsiung and Yokohama were relatively slow.

Table 3 Growth in throughputs of the selected ports

Port	2007			2006	2004	2002	2000	2000-2007	
	Rank	Throughput (millions TEU)	Annual Growth Rate (%)	Annual Growth Rate (%)	Annual Growth Rate (%)	Annual Growth Rate (%)	Annual Growth Rate (%)	Ave. Annual Growth Rate(%)	Total Growth Rate (%)
SGP	1	27.94	12.70	6.90	15.85	8.80	7.16	7.94	63.52
SHA	2	26.15	20.45	20.05	29.02	35.96	33.45	45.74	365.88
HKG	3	24	1.96	4.15	7.51	7.39	11.64	4.08	32.61
SZN	4	21.1	14.25	14.02	28.59	50	33.85	53.54	428.29
BUS	5	13.27	10.23	1.66	12.15	18.29	35.68	9.62	76.96
KHH	8	10.26	4.96	3.21	9.85	12.62	6.31	4.77	38.16
YOK	31	3.43	7.13	11.38	8.50	2.69	8.78	5.99	47.96

3. LITERATURE REVIEWS

In the earlier studies, the relationship among ports usually described in terms of their geographic locations and/or cargo sources. For example, Anderson *et al.* (2008) stated that ports of Busan and Shanghai are the major competitors for intercontinental transshipment cargoes due to originating from production centers in northern China on their way to European and North American markets. The statement may be true, but the quantitative relations of these ports are unknown.

Therefore, several studies in literature used time series methods to analyze the relationship. Fung (2001) described that Hong Kong and Singapore are the two busiest container ports in the world, and these two ports are similar to each other in terms of technology and efficiency. In order to capture this kind of trade-interdependency and oligopolistic relationship in the East and Southeast Asian market for container handling services, cointegration and structural vector error correction model (VECM) were used to capture the long-run equilibrium and the short-run dynamic of the interaction between Hong Kong terminals, Hong Kong midstream and Singapore terminals in the study. Fung also used impulse response function to analyze the response of shock from other variables, and the container throughputs of Hong Kong container terminals, Hong Kong midstream and the Singapore container terminals responded negatively to the supply shock of each other. De and Ghosh (2003) used cointegration test and Granger causality to find out the relationship between port performance and port traffic by using data of Indian ports. The results found that a port performs better by improving its operational and asset performance, and then it is likely to get higher traffic. Yap and Lam (2006) used cointegration tests and error correction models to determine the long-term relationship and short-term inter-port dynamics between ports of Hong Kong, Kaohsiung, Keelung, Kobe, Nagoya, Osaka, Pusan, Taichung, Tokyo and Yokohama, based on the time series data from 1970 to 2001. The result indicated that Hong Kong and Pusan were the distinctive beneficiaries from inter-port competition in the region for the past three decades.

These studies all imply that container throughput is the simplest index to explore relationships among ports, or at least is the easiest available data to collect, so it is also used for empirical analysis in this study. Furthermore, cointegration test is used by most of these studies to depict the long-term and short-term relationship among ports. In addition, one important issue of port relation is to find out the sources of forecast error of throughput. Therefore, the generalised forecast error variance decomposition is also used in this study, which partitions

the variance of the forecast error of each variable into the proportions attributable to shocks from each of the variables in the system including itself, and measures the relative effects.

4. METHODOLOGY

The process and methods of time series analysis adopted in this study can be divided into six steps as shown in Figure 1. At first, the time series data of container throughput of the respective ports are expressed in logarithmic form for exponential smoothing. The second step is using unit root test to check the stationarity of the data, and to choose the lag length by AIC (Akaike information criteria) and SIC (Schwartz information criteria) in step three. The fourth step is using cointegration test to find out the existence of long-term and short-term relationship. If there is no cointegration, vector autoregression model (VAR) is used to check the existence of short-term relationship. Fifth, Granger causality test is used to examine lead and lag relationship of ports, which means a lead variable would effect on a lag variable. Finally, using generalised forecast error variance decomposition can reflect the proportion of forecast error which is explained by an unanticipated change in throughput of a specific port.

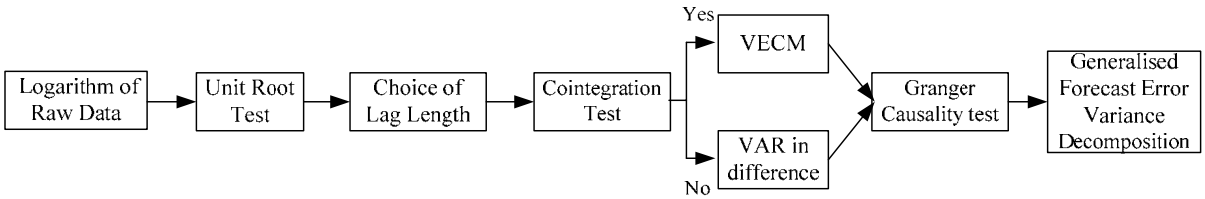

Figure 1 Process of time series analysis

4.1 Unit Root Test

The unit root test was developed to test for the existence of stationarity in a time series. A time series, X_t, is said to be integrated of order d (denoted $X_t \sim I(d)$) if it is a stationary series after differencing d times (Engle and Granger,1987).

Two tests can be applied for unit root test: PP test (Phillips-Perron test) (Phillips, 1987) and the KPSS (Kwiatkowski *et al.*, 1992). The first one test non rejection of the null hypothesis, which implies that the series is non-stationary; whereas the rejection of the null hypothesis means the time series is stationary. KPSS test defines a null hypothesis of stationary against the non-stationary hypothesis. The principal determinant is PP test. All of those t-statistic with critical values were calculated by MacKinnon (MacKinnon *et al.*, 1991).

The PP test for unit roots adopts the basic ADF (augmented Dickey-Fuller test) related hypothesis, and modifies them to PP statistical values under the circumstance that the error term is allowed to be of weak dependency and heterogeneous variance. Equation 1 includes no intercept and trend, equation 2 includes intercept but no trend, and equation 3 includes both intercept and trend.

$$\Delta y_t = rY_{t-1} + \varepsilon_t \tag{1}$$

$$\Delta y_t = a_0 + rY_{t-1} + \varepsilon_t \tag{2}$$

$$\Delta y_t = a_0 + ry_{t-1} + a_2 t + \varepsilon_t \tag{3}$$

KPSS model assumes that a time series y_t can be decomposed as:

$$y_t = \xi_t + r_t + \varepsilon_t \tag{4}$$

$$r_t = r_{t-1} + u_t \tag{5}$$

where ξ_t is a deterministic trend, r_t is a random series, u_t is a random variable with mean equal zero and variance σ_u^2, and ε_t means stationary error.

4.2 Lag Length

The lag length for the VAR*(p)* model can be determined based on model selection criteria. If p is too small then the remaining serial correlation in the errors will bias the test. On the contrary, if p is too large then the power of the test will suffer. This lag length is frequently selected using an explicit statistical criterion such as AIC (Akaike information criteria) or SIC (Schwartz information criteria).

The general approach is to fit VAR(p) models with orders $p = 0, ..., p_{\max}$ and choose the value of p which minimizes the model selection criteria. This study uses the two most common information criteria AIC and SIC, which are shown in equation 6 and equation 7.

$$AIC(k) = T * \ln(RSS / T) + 2k \tag{6}$$

$$SC(k) = T * \ln(RSS) + k * \ln(T) \tag{7}$$

where *ln* is the natural logarithm, *k* is the number of parameters in the model, *T* is the number of data points (observations) and *RSS* is the residual sums of squares.

AIC and SIC are used to determine the optimal lag length. However, it also determined by adding lagged difference terms until error autocorrelation is removed.

4.3 Cointegration Test

Engle and Granger (1987) pointed out that a linear combination of two or more non-stationary series may be stationary. If such a stationary linear combination exists, the non-stationary time series can be said to be cointegrated. Cointegration is essentially based on the idea that there may be a long-run co-movement between trended economic time series, so that there is a common equilibrium relation which the time series have a tendency to revert. Thus, even if the time series themselves are nonstationary, a linear combination of them can be stationary. The concept of cointegration was first introduced by Granger and elaborated further by Engle and Granger, Engle and Yoo, Phillips and Ouliaris, Stock and Waston, Phillips and Johansen, among others (Asteriou, 2006). This study uses Johansen's cointegration analysis.

In order to present this approach, it is useful to extend the single-equation error-correction model to a multivariate one. Assume that there are three variables, γ_t, X_t and W_t which can all be endogenous, i.e. using matrix notation for $Z_t=[\gamma_t, X_t, W_t]$

$$Z_t = A_1 Z_{t-1} + A_2 Z_{t-2} + ... + A_k Z_{t-k} + u_t \tag{8}$$

Thus, it can be reformulated in a vector error-correction model (VECM) as follows.

$$\Delta Z_t = \Gamma_1 \Delta Z_{t-1} + \Gamma_2 Z_{t-2} + ... + \Gamma_{k-1} Z_{t-k-1} + \Pi Z_{t-1} + u_t \tag{9}$$

where Γ_i= (I-A_1-A_2-,,,-A_k) (i=1,2,…,k-1) and Π= - (I-A_1-A_2-…-A_k). The Π matrix contains information regarding the long-run relationships. In fact $\Pi=\alpha\beta'$, where α will include the speed of adjustment to equilibrium coefficients, while β' will be the long-run matrix of coefficients. Therefore the $\beta' Z_{t-1}$ term is equivalent to the error-correction term (γ_t-β_0-$\beta_1 X_{t-1}$) in the single-equation case, except that $\beta' Z_{t-1}$ contains up to (n-1) vectors in a multivariate framework (Asteriou, 2006).

4.4 Vector Autoregression Model (VAR)

Vector autoregression is an econometric model, which can be used to capture the evolution and the interdependencies between multiple time series, generalizing the univariate AR models. All the variables in a VAR are treated symmetrically by including each variable an equation explaining its evolution, based on its own lags and the lags of all other variables in the model.

The basic p-lag vector autoregressive (VAR(p)) model has the form as follows.

$$y_t = c + \prod_1 y_{t-1} + \prod_2 y_{t-2} + ... + \prod_p y_{t-p} + \varepsilon_t, \quad t=1,\ldots, T \tag{10}$$

Let $Y_t = (y_{1t}, y_{2t}, \ldots, y_{nt})'$ denote an (n×1) vector of time series variables.
where Π_i are (n×n) coefficient matrices, and ε_t is an (n×1) unobservable zero mean white noise vector process (serially uncorrelated or independent) with time invariant covariance matrix Σ.

If the time series are cointegration, VECM (Vector Error Correction Model) should be used to analyze short-term interaction. Otherwise, VAR in differences models should be used to estimate short-term interaction of non-stationarity series.

$$\Delta y_t = c + \prod_1 \Delta y_{t-1} + \prod_2 \Delta y_{t-2} + ... + \prod_p \Delta y_{t-p} + \varepsilon_t \tag{11}$$

4.5 Granger Causality Test

Granger causality test can measure whether one thing happens before another thing and helps to predict it. The standard Granger causality test examines if there exists feedback (bi-directional) or one-way causality between variables. The Granger causality test for the case of two variables y_t and x_t estimates as the following VAR model:

$$y_t = \alpha_1 + \sum_{i=1}^{n} \beta_i x_{t-i} + \sum_{j=1}^{m} r_j y_{t-j} + \varepsilon_{1t} \tag{12}$$

$$x_t = \alpha_1 + \sum_{i=1}^{n} \theta_i x_{t-i} + \sum_{j=1}^{m} \delta_j y_{t-j} + \varepsilon_{2t} \tag{13}$$

where it is assumed that both ε_{y_t} and ε_{xt} are uncorrelated white-noise error terms.

In this model it can have the following different cases. First of all, the lagged x terms in equation 12 may be statistically different from zero as a group, and the lagged y terms in equation 13 not statistically different from zero. In this case, it means that x_t causes y_t, and vice versa. The second case is that both sets of x and y terms are statistically different from zero in equation 12 and 13, so that it has bi-directional causality, i.e. feedback. Finally, both sets of x and y terms are not statistically different from zero in equation 12 and 13, so that x_t is independent of y_t.

4.6 Generalised Forecast Error Variance Decomposition

An alternative procedure to the orthogonalized forecast error variance decomposition would be to consider the proportion of variance of the N-step forecast errors which is explained by conditioning on the non-orthogonalized shocks, $u_{it}, u_{i,t+1}, \ldots, u_{i,t+N}$, but explicitly to allow for the contemporaneous correlations between theses shocks and the shocks to the other equations in the system. Pesaran and Pesaran (1997) give a summary of the generalized decomposition methodology. A VAR (p) model is typically written as $r_t = A' y_t + e_t$, where $t= 1,2,\ldots,n$, $y_t=(1, y_{t-1}, y_{t-2}, \ldots, y_{t-p})$ and r_t is an $m \times 1$ vector. The disturbances are well-behaved white-noise processes with covariance matrix Σ, the regressors are not perfectly collinear and all

variables are generated by a stationary process. The VAR can be represented by an infinite MA representation given as:

$$r_t = \sum_{j=0}^{\infty} A_j u_{t-j} \tag{14}$$

where $A_j = \Phi_1 A_{j-1} + \Phi_2 A_{j-2} + \ldots + \Phi_p A_{j-p}$, $j=1,2,\ldots$, with $A_0=I_m$ and $A_j=0$ for $j<0$.

Using the MA representation, the forecast error of predicting r_{t+N} conditional on the information at time t-1 is given by $\xi_t(N) = \sum_{k=0}^{N} A_k u_{t+N-k}$, where $\xi_t(N)$ is $m \times 1$, and the total forecast error covariance matrix is given as

$$Cov[\xi_t(N)] = \sum_{k=0}^{N} A_k \Sigma A_k^{'}. \tag{15}$$

The forecast error covariance matrix of predicting r_{t+N} conditional on the information at time t-1, and the given values of the shocks to the ith equation, $u_{it}, u_{i,t+1}, \ldots, u_{i,t+N}$. It can get

$$\underset{m\times 1}{\xi_t^{(i)}(N)} = \sum_{k=0}^{N} A_k (u_{t+N-k} - E(u_{t+N-k} | u_{i,t+N-k})) \tag{16}$$

As in the case of the generalised impulse responses, assuming $u_t \sim N(0,\Sigma)$, it can get $E(u_{t+N-1} | u_{i,t+N-k}) = (\sigma_{ii}^{-1} \Sigma e_i) u_{i,t+N-k}$ for k=0,1,2,…,N, i=1,2,…,m. Substituting this results back in equation 15, it can get $\xi_t^{(i)}(N) = \sum_{k=0}^{N} A_k (u_{t+N-k} - \sigma_{ii}^{-1} \Sigma e_i u_{u,t+N-k})$ and taking unconditional expectations, yields

$$Cov(\xi_t^{(i)}(N)) = \sum_{k=0}^{N} A_k \Sigma A_k^{'} - \sigma_{ii}^{-1} (\sum_{k=0}^{N} A_k \Sigma e_i e_i^{'} \Sigma A_k^{'}) \tag{17}$$

Moreover**,** using equation 15 and 17, it follows that the decline in the N-step forecast error variance of r_t obtained as a result of conditioning on the future shocks to the ith equation is given by

$$\begin{aligned} \Delta_{iN} &= Cov[\xi_t(N)] - Cov[\xi_t^{(i)}(N)] \\ &= \sigma_{ii}^{-1} \sum_{k=0}^{N} A_k \Sigma e_i e_i^{'} \Sigma A_k^{'} \end{aligned} \tag{18}$$

Scaling the jth diagonal element of Δ_{iN}, namely $e_j^{'} \Delta_{iN} e_j$, by the N-step ahead forecast error variance of the ith variable in r_t, it can get the following generalised forecast error variance decomposition:

$$\Psi_{ij,N} = \frac{\sigma_{ii}^{-1} \sum_{k=0}^{N} (e_j^{'} A_k \Sigma e_i)^2}{\sum_{k=0}^{N} e_i^{'} A_k \Sigma A_k^{'} e_i} \tag{19}$$

Note that, unlike the orthogonalized case, the row values for the generalized decompositions do not have to sum up to 1.00. The generalized version gives an "optimal" measure of the amount of forecast error variance decomposition for each variable, like an average of the decomposition values that would result from various ways in which one could possibly order the variables.

5. EMPIRICAL ANALYSIS

5.1 Unit Root Test

Before the unit root test, seasonal test was conducted for each data set to determine if seasonal adjustment is required to account for seasonal variation. After the test, Hong Kong was adjusted by using moving average method before sequence tests. In addition, Newey-West Bandwidth criterion was used in PP and KPSS test to choice the lag length. According to the unit root test, all these ports can be divided into 3 groups: I (0) including Shanghai, I(1) including Singapore, Hong Kong, Shenzhen and Busan, and I(2) including Kaohsiung and Yokohama. The results are showed in Table 4.

Table 4 Results of unit root test

Unit test / Port	Level		1st difference		2nd difference	
	PP	KPSS	PP	KPSS	PP	KPSS
SGP	-4.04* (5)	0.18* (6)	-16.94* (2)	0.02 (1)	-54.33* (8)	0.02 (3)
HKG	-2.29 (4)	0.14 (7)	-11.40* (3)	0.06 (2)	-31.76* (6)	0.02 (3)
SHA	-7.16* (4)	0.20* (5)	-25.98* (16)	0.15* (24)	-84.12* (39)	0.50* (93)
SZN	-3.85* (3)	0.30* (6)	-13.67* (3)	0.03 (6)	-70.84* (28)	0.19* (37)
BUS	-8.29* (5)	0.24* (5)	-60.03* (64)	0.12 (15)	-91.84* (53)	0.13 (15)
YOK	-7.51* (1)	0.32* (2)	-30.14* (26)	0.21* (43)	-47.07* (28)	0.09 (15)
KHH	-6.77* (4)	0.21* (5)	-34.71* (35)	0.34* (66)	-62.90* (22)	0.19 (38)

Note: The number in brackets is the lag length; * indicates statistical significant at the 5% level

5.2 Cointegration Analysis

If two ports are cointegrated, the pattern of the port throughputs cannot wander off in opposite directions for very long without coming back to a mean distance eventually, the term "long-term equilibrium" is used to describe the relationship. Cointegration of two ports implies that if one port increase in throughput, the other would increase as well, and vice versa.

Cointegration analysis were conducted for all the seven ports by pairwise comparison, the results indicate that there were no long-term equilibrium relationship existed in these ports, as shown in Table 5. In other words, there was no any co-movement or similar pattern among them. This result seems can be reasonably interpreted by the fact that the growths in throughput of these seven ports did exhibit large deviations in pattern during the eight years' period of analysis, as indicated in Table 3 and described in section 2.

Table 5 Results of cointegration analysis

Ports	Lag interval	Trace statistic	5% Critical value	Hypothesized no. of CE(s)
SGP-HKG	12	11.30 0.85	12.53 3.84	None At most 1
SGP-SHA	12	8.98 0.01	12.53 3.84	None At most 1
SGP-SZN	12	4.77 0.13	12.53 3.84	None At most 1
SGP--BUS	16	11.18 0.39	12.53 3.84	None At most 1
SGP-YOK	12	10.35 1.86	12.53 3.84	None At most 1
SGP-KHH	15	8.33 0.26	12.53 3.84	None At most 1
HKG - SHA	3	6.18 0.96	12.53 3.84	None At most 1
HKG -SZN	3	7.12 0.04	12.53 3.84	None At most 1
HKG - BUS	3	6.91 0.34	12.53 3.84	None At most 1
HKG -YOK	3	2.96 0.91	12.53 3.84	None At most 1
HKG - KHH	3	4.30 0.67	12.53 3.84	None At most 1
SHA - SZN	9	11.98 2.76	12.53 3.84	None At most 1
SHA - BUS	9	8.69 1.10	12.53 3.84	None At most 1
SHA - YOK	12	4.17 0.01	12.53 3.84	None At most 1
SHA - KHH	12	12.43 0.12	12.53 3.84	None At most 1
SZN - BUS	9	8.69 1.10	12.53 3.84	None At most 1
SZN - YOK	15	9.66 0.11	12.53 3.84	None At most 1
SZN - KHH	12	11.49 0.88	12.53 3.84	None At most 1
BUS - YOK	6	4.58 0.23	12.53 3.84	None At most 1
BUS - KHH	9	4.78 0.08	12.53 3.84	None At most 1
YOK - KHH	12	10.23 1.44	12.53 3.84	None At most 1

Note: Critical values for the trace statistic (at 5% level) were adopted from Osterwald-Lenum (1992)

5.3 Vector Autoregressive Model

Since the results of cointegration analysis concluded that there were no any long-term equilibrium relationship between these ports, VAR model in difference was then used to analyze the short-term relationship. Results of pairwise comparisons of the seven Asian major ports are shown in Figure 2. Arrows indicate influence direction, and a dotted line means unidirectional influence on ports. Figure 2 reveals that Shanghai and Shenzhen, Kaohsiung, Yokohama; Shenzhen and Busan, Yokohama, Kaohsiung, Singapore; Busan and Yokohama, Kaohsiung, Singapore; Yokohama and Kaohsiung, Singapore; Kaohsiung and Singapore all had bi-directional short-term relationship with each other. However, Shanghai had only unidirectional influence on Busan, Singapore, and Singapore had only unidirectional influence on Hong Kong. Taking Kaohsiung, the largest international container port in Taiwan, as an example, Figure 2 indicated that it had bi-directional short-term relationship with all other ports, expect Hong Kong. This result may reflect the close trading relationships of Taiwan with Mainland China, Japan, Korea, and Singapore etc..

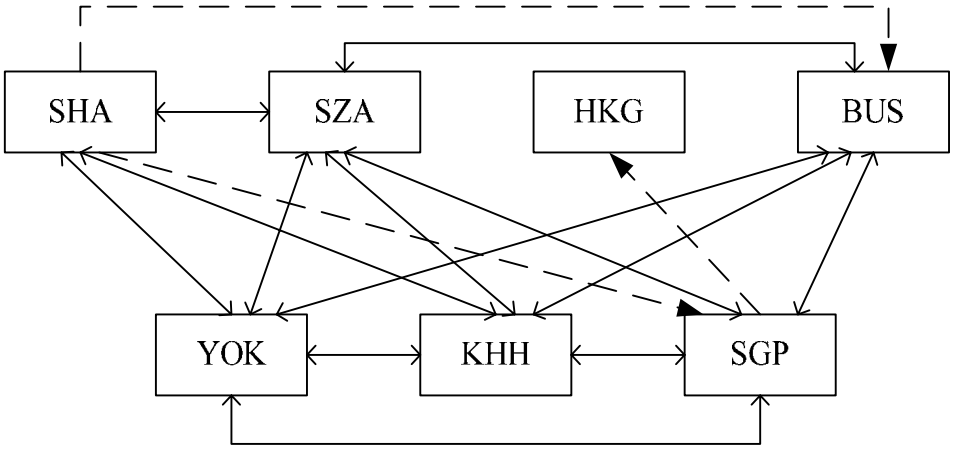

Figure 2 Results of vector autoregressive model in major Asian ports

5.4 Granger Causality Test

Granger causality test is used to explore the lead-lag relationship between two ports. It should be noticed that Granger-causality basically means a correlation between the current value of one variable and the past (lags) value of others, and is a technique for determining whether one time series is useful in forecasting another. Despite its name, Granger causality does not imply true causality.The results of Figure 3 show that most of ports were related to each other, except Hong Kong which didn't have any significant relations with any other ports. It indicates the unidirectional effect from Shanghai to Buan, Singapore; from Busan to Kaohsiung, Yokohama, and from Singapore and Yokohama to Kaohsiung. Moreover, it also shows the bi-directional relationship between Shanghai and Yokohama, Kaohsiung; Shenzhen and Yokohama, Kaohsiung, Singapore. Although, the leading series may not be the causal series, yet it can explain the lagging series. Taking Kaohsiung as an example, Figure 3 indicates that Shanghai, Shenzhen, Busan, Singapore and Yokohama are all useful to forecast Kaohsiung, due to the close trading relationships of these countries, as was described in section 5.3.

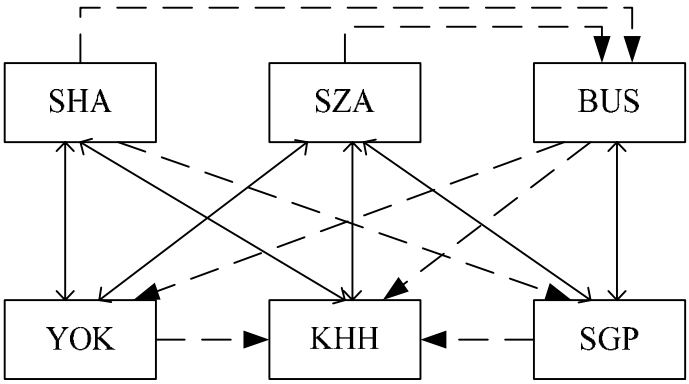

Figure 3 Results of Granger causality analysis in major Asian ports

5.5 Generalised Forecast Error Variance Decomposition

It is meaningful to assess whether unexpected movements, so-called shocks, in the variables, which means an unexpected change in throughput of a port, determine ports dynamics, and if so, which one are most influential.

In general, the results in Table 6 show that the largest proportion of the forecast error variance of a port throughput is resulted from its own shocks. However, the degree of this effect would

decrease with the increase in time horizon, while the influence from other ports may increase or decrease with the increase in time horizon.

As can be seen from Table 6(f), 27% of the forecast error variance of Kaohsiung port is resulted from Shenzhen port instantly. After a year (12 months), the percentage decreased to 15%. It also indicates that Yokohama and Shanghai also had influence on Kaohsiung port, but with less strong degree. The instant influences of other ports are relatively insignificant.

Similarly, sources of forecast error in throughput of Shanghai port is resulted from Yokohama (35%), followed by Kaohsiung (21%) and Busan (14%). Those of Shenzhen, Hong Kong, Busan, Yokohama, and Singapore are resulted from Singapore, Singapore & Shanghai, Shenzhen & Shanghai, Shanghai & Busan, and Shenzhen & Shanghai respectively, all of which can be found from Table 6.

Table 6 Results of generalized forecast error variance decomposition

(a) Generalized forecast error variance decomposition of Shanghai port

Horizon(month)	SHA	SZA	HKG	BUS	YOK	KHH	SGP
1	0.71	0.12	0.001	0.14	0.35	0.21	0.07
4	0.67	0.10	0.01	0.19	0.29	0.21	0.08
7	0.52	0.09	0.01	0.17	0.29	0.16	0.13
10	0.47	0.12	0.06	0.17	0.26	0.14	0.14
12	0.47	0.15	0.07	0.16	0.25	0.14	0.16

(b) Generalized forecast error variance decomposition of Shenzhen port

Horizon(month)	SHA	SZA	HKG	BUS	YOK	KHH	SGP
1	0.07	0.73	0.09	0.0003	0.002	0.07	0.25
4	0.17	0.44	0.06	0.13	0.07	0.15	0.19
7	0.14	0.34	0.06	0.15	0.10	0.11	0.17
10	0.15	0.32	0.07	0.18	0.11	0.10	0.16
12	0.15	0.35	0.08	0.16	0.11	0.10	0.18

(c) Generalized forecast error variance decomposition of Hong Kong port

Horizon(month)	SHA	SZA	HKG	BUS	YOK	KHH	SGP
1	0.001	0.07	0.83	0.007	0.005	0.10	0.17
4	0.03	0.08	0.76	0.04	0.007	0.08	0.18
7	0.03	0.06	0.74	0.06	0.008	0.07	0.18
10	0.03	0.06	0.74	0.05	0.01	0.06	0.19
12	0.02	0.05	0.75	0.05	0.01	0.06	0.18

(d) Generalized forecast error variance decomposition of Busan port

Horizon(month)	SHA	SZA	HKG	BUS	YOK	KHH	SGP
1	0.12	0.29	0.06	0.60	0.13	0.07	0.06
4	0.11	0.21	0.07	0.52	0.10	0.07	0.04
7	0.12	0.18	0.08	0.46	0.09	0.07	0.05
10	0.13	0.20	0.08	0.43	0.10	0.07	0.05
12	0.14	0.20	0.08	0.42	0.12	0.07	0.07

(e) Generalized forecast error variance decomposition of Yokohama port

Horizon(month)	SHA	SZA	HKG	BUS	YOK	KHH	SGP
1	0.18	0.06	0.03	0.15	0.71	0.14	0.10
4	0.16	0.10	0.05	0.17	0.46	0.09	0.08
7	0.15	0.11	0.07	0.16	0.42	0.08	0.07
10	0.14	0.12	0.08	0.17	0.38	0.09	0.08
12	0.16	0.11	0.08	0.15	0.42	0.10	0.10

(f) Generalized forecast error variance decomposition of Kaohsiung port

Horizon(month)	SHA	SZA	HKG	BUS	YOK	KHH	SGP
1	0.12	0.27	0.08	0.02	0.11	0.64	0.05
4	0.07	0.21	0.10	0.09	0.13	0.44	0.09
7	0.09	0.15	0.20	0.13	0.15	0.27	0.09
10	0.10	0.16	0.18	0.13	0.12	0.24	0.09
12	0.09	0.15	0.16	0.13	0.15	0.21	0.11

(g) Generalized forecast error variance decomposition of Singapore port

Horizon(month)	SHA	SZA	HKG	BUS	YOK	KHH	SGP
1	0.11	0.27	0.03	0.11	0.06	0.04	0.66
4	0.10	0.16	0.07	0.06	0.06	0.09	0.41
7	0.09	0.13	0.09	0.05	0.05	0.13	0.34
10	0.12	0.12	0.09	0.06	0.06	0.13	0.30
12	0.13	0.16	0.08	0.07	0.10	0.12	0.32

5.6 Summary of Relationships among Ports

To sum up, the above results reveal that in general, these seven ports in Asia were closely related with each others. According to the results of the generalized forecast error variance decomposition, it also indicates that Shenzhen port can explain about 27-29% of the forecast error variance of Busan, Kaohsiung and Singapore. In addition, port of Shenzhen had short-term interaction with Busan, Yokohama, Kaohsiung and Singapore, and had bi-directional causality with Yokohama, Kaohsiung and Singapore. It implies that port of Shenzhen in China is a potential port which can be expected to play more important role in the future.

Shanghai port had unidirectional influence on Busan and Singapore, and had bi-directional influence on Yokohama and Kaohsiung in VAR and Granger causality test. In addition, Yokohama and Busan can explain about 35% and 14% the variance of the forecast error when Shanghai port shocks. On the other hand, Shanghai can explain about 18% and 12% the variance of the forecast error when Yokohama and Busan shocks. According to UNESCAP (2005), due to the rapid growth of Chinese container trades, Busan and Japanese ports have increased feeder links with Shanghai, and the central and the northern regions of China. Besides, City of Yokohama (2007) also calculated that import and export from Yokohama to Shanghai were 136,594 and 124,162 TEUs respectively, and Shanghai was the first rank trading port in Yokohama.

Specially, Shanghai, Shenzhen, Kaohsiung, Yokohama and Busan had weak relation with Hong Kong, except Singapore. Both Singapore and Hong Kong are located in regions crisscrossed by networks of minor shipping services, and are the main transshipment ports of the region (UNESCAP, 2005; 2007). According to the results, Singapore can explain 17% variance of the forecast error of Hong Kong. It is consistent with results of the VAR model

that Singapore had unidirectional relation to Hong Kong in short-term.

Kaohsiung port shows bi-directional short-term relationship with Shanghai, Yokohama, Shenzhen, Singapore and Busan. This may reflect the close trading relationships of Taiwan with China, Japan, Korea, and Singapore.

6. CONCLUDING REMARKS

(1) The throughput of a port contains useful information to explore relationships of ports under the constraints that more detailed cargoes flow data are not available. Comparing with previous studies, this study further uses generalized forecast error variance decomposition method to distinguish the source of variance. The results provide additional information to gain more insights about complex relationships among Asian ports.
(2) There were no long-term equilibrium relationship existed in these selected major ports during 2000-2007, however short-term relationship among them did exist. It may be attributed to the fact that growth in port throughputs of these seven ports exhibit fairly large deviations during the analysis period.
(3) It is interesting to note that the seasonal variation of throughput in Hong Kong port was significant. Moreover, Shanghai, Shenzhen, Kaohsiung, Yokohama and Busan had less influence on Hong Kong except that of Singapore. Singapore and Hong Kong are located in regions crisscrossed by networks of minor shipping services and both of them are the main hub ports in Asia, which implies that the relationship did exist in these two main hub ports.
(4) Kaohsiung port shows bi-directional short-term relationship with Shanghai, Yokohama, Shenzhen, Singapore and Busan. This may reflect the close trading relationships of Taiwan with China, Japan, Korea, and Singapore.
(5) More rigorous analysis of ports' relationships can be made only on the basis of detailed cargoes flow data among ports. But these kinds of statistics are not available in many ports, especially for the transshipment cargoes. It is suggested that port authorities spend some efforts to include this kind of statistics into their database system, which would be greatly helpful to facilitate similar studies in the future.

REFERENCES

Anderson, C.M., Park, Y.A., Chang, Y.T., Yang, C.H., Lee,T.W. and Luo, M. (2008) A game-theoretic analysis of competition among container port hubs: the case of Busan and Shanghai [1], **Maritime and Policy Management, Vol. 35, No. 1**, 5–26.

Asteriou, D. (2006) **Applied Econometrics-A Modern Approach using EViews and Microfit.** Palgrave Macmillan, New York.

Chiou, R.B.(2007) *Current Situation of Global* Liner *Shipping*. Retrieved June 5, 2007, from http://ibit.ntcb.edu.tw/forum/download.php?id=921&sid=63dbc379000a38ec33d104dcb732c176, Accessed May 13, 2008.

China shipping gazette (2008), *Statistics Data*. Retrieved June 3, 2008, from http://www.snet.com.cn/.

City of Yokohama (2007) *Yokohama Port's Statistics*. Retrieved July 3, 2008, from http://www.city.yokohama.jp/me/port/statistics/data/an07index.html#Preannual2007.

De, P. and Ghosh, B. (2003) Causality between performance and traffic: an investigation with

Indian ports, **Maritime and Policy Management, Vol. 30, No. 1**, 5–27.

Engle, R.F. and Granger, C.W.J. (1987) Cointegration and Error Correction Representation, Estimation and Test, **Econometrica, Vol.55, No.2**, 251-273.

Fung, K. F. (2001) Competition between the ports of Hong Kong and Singapore: a structural vector error correction model to forecast the demand for container handling services, **Maritime and Policy Management, Vol. 28, No. 1**, 3-22.

Kwiatkowski, D., Phillips, P.C.B., Schmidt, P. and Shin, Y. (1992) Testing the Null Hypothesis of Stationarity against the Alternative of A Unit Root: How Sure Are We that Econimic Time Series Have A Unit Root? **Journal of Econometrics, Vol.45**, 159-178.

MacKinnon J. G. (1991) Critical values for Cointegration Tests. In R. F. Engle and C.W.J. Granger (eds.), **Long-run Economic Relationships: Readings in Cointegration.** Oxford: Oxford University Press.

Osterwald-Lenum, M., (1992) A note with quantiles of the asymptotic distribution of the maximum likelihood cointegration rank test statistics, **Oxford Bulletin of Economics and Statistics**, **Vol.54**, 461–472.

Pesaran, H.H. and Shin, Y. (1998) Generalized impulse response analysis in linear multivariate models, **Economics Letters, Vol.58**, 17-29.

Phillips, P.C.B. (1987) Time series regression with a unit root, **Econometrica, Vol.55**, 277-301.

UNCTAD (2008) Review of Maritime Transport, United Nations, New York and Geneva.

UNESCAP (2007) Regional Shipping and Port Development Strategies: Container Traffic Forecast 2007 Update, United Nations, New York.

UNESCAP (2005) Regional Shipping and Port Development Strategies: Container Traffic Forecast, United Nations, New York.

Yap, W. Y. and Lam, J. S.L. (2006) Competition dynamics between container ports in East Asia, **Transportation Research Part A, Vol. 40**, 35–51.