Path Analysis of International Dry Bulk Carriers Based on Structural Equation Modeling

Zijian GUO
Professor
School of Civil and Hydraulic Engineering
Dalian University of Technology
No.2 Ling gong Road, Dalian
116023 China
Fax: +86-0411-84707174
E-mail: zjguo@dlut.edu.cn

Wenyuan WANG
Doctoral candidate
School of Civil and Hydraulic Engineering
Dalian University of Technology
No.2 Ling gong Road, Dalian
116023 China
Fax: +86-0411-84707174
E-mail: bsklwwy@gmail.com

Xiangqun SONG
Professor
School of Civil and Hydraulic Engineering
Dalian University of Technology
No.2 Ling gong Road, Dalian
116023 China
Fax: +86-0411-84707174
E-mail: sxqun@126.com

Quanxin JIANG
Master of Engineering
China Road and Bridge Corporation
Andingmenwaidajie C88, Zhonglu Plaza, Beijing
100011 China
Fax: +86-0411-84707174
E-mail: lovejqx@126.com

Abstract: In this paper, we focus on the international dry bulk freight rates, make qualitative analyses on the composing factors of the dry bulk shipping market, and investigate the features of mutual action of the world dry bulk demand and supply, sum up the features of the present shipping market. Meanwhile, we make a series of quantitative studies on the existence, nature and magnitude of regularity, transportation costs, supply and demand relationship, economy and trade, seasonal factors and the political environmental factors by SEM--structural equation modeling. And the path coefficients of factors are calculated through data analysis, by which we explain the relationship between the major factors; provide a strong basis for the analysis and forecasting the international dry bulk freight rates.

Key Words: *International shipping market, Freight Index, structural equation model, Path analysis*

1. INTRODUCTION AND LITERATURE REVIEW

One could hardly find a shipping paper that does not start by stressing that shipping is a very volatile, unpredictable and risky market; that, at the same time, shipping is the bloodline of trade, growth and welfare and that, therefore, its fortunes are inextricably linked to those motivations that drive people and nations to trade more with each other.

International shipping market area contains a lot of research object, in this paper, the international dry bulk freight rates are the major research objects. Former days, there are little literatures about international dry bulk freight, the mainly reason is that freight statistical data more difficult to collect, since the Baltic Freight Index (BDI) released, the research on the international dry bulk freight rates has grown, Cull Nane (1992) used moving average model to establish an international dry bulk freight model for the first time. Veensrta and Franses (1995) used higher time-series econometric same plot process and the unit root test method, used Freight Index time series from different dry bulk ship, and different routes, establish the first order vector autoregressive (VAR) model for the index forecast. Berg-Andreassen(1996) made a Dick - Fuller test (augmented Dickey Fuller, ADF) using

observation data time series from April 1985 to December 1988 of the international dry bulk freight rates, and concluded that the freight rates subject to random sequence trend. Kavussanos and Namikos (1999) tested unbiased assumptions of the international dry bulk futures prices. British scholar Mnaolsi G. Kauvssnaos and Amir H.Alizdaeh-M (2001) created a single variable season points autoregressive moving average model (Seasonal ARIMA-SARIMA) Multivariate season and seasonal total plot Cointegration (Seasonal Cointegrating) vector autoregressive (VAR) model of international dry bulk index conduct research and came to the characteristics seasonal variations of dry bulk shipping market. Yang Weinian (1999) established multiple linear regression model and multi-variable lag factor model of the international dry bulk freight rates. He Yingjie (2002) used the time series TSCI and ARMA model to analyze Freight Index, pointed out the index's long-term growth trend, cyclical fluctuations, as well as the characteristics of seasonal fluctuations. Lv Jing and Chen Qinghui (2003) found a zero mean stationary serie meet the requirements of ARMA modeling on the international dry bulk freight rates , after the long-term trends, the cyclical fluctuations and volatility of the season were extracted. Liu Jianlin and Shi Xin(2005) adopted the Johansen Cointegration technology to research on the international dry bulk futures market, futures prices and spot prices, came to a short-term futures pricing formula based on EGARCH (1,1) model. This article will mainly research on the international dry bulk freight rates, establish the SEM structure model, analyze the the relationship of the direct and indirect affect factors.

2. ANALYSIS: SHIPPING PRICE AFFECT FACTORS

Transportation costs: Shipping costs contain three main parts: the fixed infrastructure costs, the mobile devices costs, the operating costs. Fixed facilities, including port terminals and road facilities, the cost mainly include: the tax of ship tons, parking fees, mooring fees, terminal fees, water charges, tugboat fees, quarantine fees, customs inspection fees, agent fees, the lighthouse fee , canal and the strait through fees etc. As the transport infrastructure in terms of geographical location is relatively fixed, determine their position can only be used by the crowd or the goods associated with them. For this reason, in the transport system, often there are such imbalances: a part of the fixed facilities arising from the use of extraordinary crowded at the same time; another part of the fixed facilities has been idle. Mobile devices is mainly related to the ship and its equipment, its costs include rental charges, depreciation, interest, age of repair costs, maintenance fees, repair dock fees, fairway revised project costs, self-repair material costs, ship inspection fees and so on. Operating costs is directly related to changes in traffic-related costs. It contains two types: one is operating staff salaries; the other is the amount of fuel and supporting material to ensure the transport equipment operated. The more transport workload, the greater the direct operating costs. In addition to those changes directly related to traffic-related costs, transport companies in general also need a number of support staff and managers, their wages as well as the work required expenses are indirect operating costs. Indirect operating costs are part of traffic-related and other parts with little to do with changes in traffic. Operating costs include material costs, Run-expected costs, crew costs, management fees and so on.

Supply and demand relationship: Freight is transport services prices, as other commodity prices, is affected by the supply-demand relationship in shipping market. Shipping demand is defined as the demand for the maritime transport capacity and labor, which is result from trade between regional and national at a certain period of time and a certain tariff level. Shipping needs include traffic, cargo-type structure, the transport distance and time requirements etc. Dry bulk cargo transport demand is mainly reflected in several kinds of

goods such as coal, ore and grain. Ship supply is mainly embodied in the shipping capacity. Capacity mainly includes the supply of tonnage and operational efficiency, tonnage is mainly manifested in the world fleet size and also affected by transportation costs, the completion volume of new vessels, ship trading market, the crew labor market as well as the operating environment. The efficiency operation of the ship influencing factors are ship design speed, the annual operating days, the average parking time etc. International dry bulk freight rates is a market equilibrium price through free bidding in the international dry bulk cargo transport market by the dry bulk transport of the supply side and demand-side of perfect competition. Market equilibrium price is the prices when a variety of confrontation with the forces of change, in the process of conflict with each other, adjustment, operation, the relative strength appears quite, supply and demand balance in a temporary state, the demand for shipping prices in line with the supply price. When the balance of power changes in the market for dry bulk cargo transport, under the role of the market mechanism, the original balance will be broken, and reach new market equilibrium, a new market price. Relationship between supply and demand becomes the main reason to impact of international dry bulk freight rates.

Economy and trade: Maritime transport is the principal mean to achieve worldwide economic exchanges and international trade; therefore, shipping demand is derived from international trade. This feature shows the development and changes in international trade form make a direct impact on the international shipping market, and the development of international trade depends entirely on the development of the world economy, so the state of the world's economic development, the scope and scale of the changes in international trades will have a significant impact on demand for shipping. The economy is a leader in trade, development of the world economy open up new areas for international trade. When the world in rapid economic growth, international trade will also be a corresponding growing trend, with the attendant on there necessarily is a strong demand for shipping market, while there is development, and prosperity; on the other hand, when the world economic recession, the contraction of international trade, at the same time, inadequate supply lead to maritime traffic decline, the shipping market shows a depression and recession.

Other factors: Other factors that impact the international shipping industry are mainly seasonal factors and the political environmental factors. Seasonal factors can affect both supply and demand of shipping. In different seasons, the ship makes a different seaworthiness as a result of natural conditions and restrictions, which determines the seasonal capacity for the supply. These key commodities of consumption and production such as coal, grain, and ore are more seasonal, which lead to seasonal fluctuations in transportation demand. International political and military events are the reason for random fluctuations in international shipping freight. Political factors mainly include the change in international relations, war between the states, coup , civil war and so on. These events may affect the world economic growth, change the trade relations and the flow of goods, change the average shipping distance, change the volume of trade of certain commodities, etc., and thus affect the demand for shipping. Their impact on shipping demand has unexpected features, which cause fluctuations in freight rates.

3. METHODOLOGY: MODEL SPECIFICATION

3.1 Structural equation mode

Structural equation modeling (SEM) is a statistical technique for testing and estimating causal

relationships using a combination of statistical data and qualitative causal assumptions (Hau *et al.*, 2005). This view of SEM was articulated by the geneticist Sewall Wright, the economists Trygve Haavelmo and Herbert Simon, and formally defined by Judea Pearl using a calculus of counterfactuals.

Structural Equation Models (SEM) encourages confirmatory rather than exploratory modeling; thus, it is suited to theory testing rather than theory development. It usually starts with a hypothesis, represents it as a model, operationalizes the constructs of interest with a measurement instrument, and tests the model. The causal assumptions embedded in the model often have falsifiable implications which can be tested against the data. With an accepted theory or otherwise confirmed model, SEM can also be used inductively by specifying the model and using data to estimate the values of free parameters. Often the initial hypothesis requires adjustment in light of model evidence, but SEM is rarely used purely for exploration.

Among its strengths is the ability to model constructs as latent variables (variables which are not measured directly, but are estimated in the model from measured variables which are assumed to 'tap into' the latent variables). This allows the modeler to explicitly capture the unreliability of measurement in the model, which in theory allows the structural relations between latent variables to be accurately estimated. Factor analysis, path analysis and regression all represent special cases of SEM.

In SEM, the qualitative causal assumptions are represented by the missing variables in each equation, as well as vanishing covariance's among some error terms. These assumptions are testable in experimental studies and must be confirmed judgmentally in observational studies. Our SEM modeling specific process for international bulk market rate is shown in figure 1.

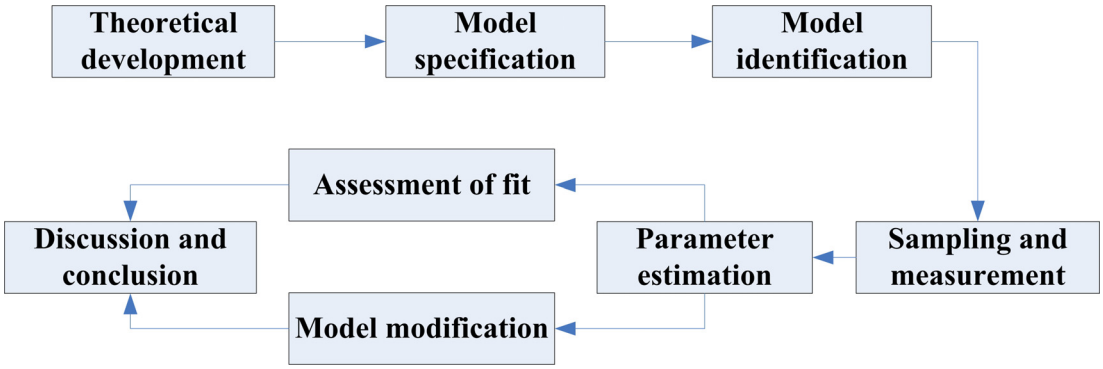

Figure 1 Analysis process of structural equation modeling

3.2 Path analysis

Path analysis is an extension of the regression model, used to test the fit of the correlation matrix against two or more causal models which are being compared by the researcher. The model is usually depicted in a circle-and-arrow figure in which single-headed arrows indicate causation. A regression is done for each variable in the model as a dependent on others which the model indicates are causes. The regression weights predicted by the model are compared with the observed correlation matrix for the variables, and a goodness-of-fit statistic is calculated. The best-fitting of two or more models is selected by the researcher as the best model for advancement of theory.

Path analysis requires the usual assumptions of regression. It is particularly sensitive to model

specification because failure to include relevant causal variables or inclusion of extraneous variables often substantially affects the path coefficients, which are used to assess the relative importance of various direct and indirect causal paths to the dependent variable. Such interpretations should be undertaken in the context of comparing alternative models, after assessing their goodness of fit discussed in the section on structural equation modeling (SEM packages are commonly used today for path analysis in lieu of stand-alone path analysis programs). When the variables in the model are latent variables measured by multiple observed indicators, path analysis is termed structural equation modeling, treated separately. We follow the conventional terminology by which path analysis refers to modeling single-indicator variables.

The regression equation is:

$$y = \beta_0 + \beta_1 x_1 + \beta_2 x_2 + \cdots + \beta_k x_k \tag{1}$$

$$\bar{y} = \beta_0 + \beta_1 \bar{x}_1 + \beta_2 \bar{x}_2 + \cdots + \beta_k \bar{x}_k \tag{2}$$

(1) - (2) were:

$$y - \bar{y} = \beta_1 (x_1 - \bar{x}_1) + \cdots + \beta_k (x_k - x_k) \tag{3}$$

(3)-types on both sides at the same time divided by the standard deviation of variable y, and then proceed to the standardization of treatment:

$$y - \bar{y}/\sigma_y = \beta_1 (x_1 - \bar{x}_1)/\sigma_y + \cdots + \beta_k (x_k - \bar{x}_k)/\sigma_y \tag{4}$$

$$y - \bar{y}/\sigma_y = \beta_1 \frac{\sigma_{x_1}}{\sigma_y} \frac{(x_1 - \bar{x}_1)}{\sigma_{x_1}} + \cdots + \beta_k \frac{\sigma_{x_k}}{\sigma_y} \frac{(x_k - \bar{x}_k)}{\sigma_{x_k}} \tag{5}$$

For (1) In accordance with the principle of least squares available by the actual observations on the partial regression coefficient of the formal equations:

$$\begin{cases} p_1 + r_{1\cdot 2} p_2 + \cdots + r_{1\cdot k} p_k = r_1 y \\ r_{2\cdot 1} p_1 + p_2 + \cdots + r_{2\cdot k} p_k = r_2 y \\ \cdots\cdots\cdots\cdots \\ r_{k\cdot 1} p_1 + r_{1\cdot 2} p_2 + \cdots + p_k = r_k y \end{cases} \tag{6}$$

Its matrix form:

$$\begin{pmatrix} 1 & r_{1\cdot 2} & \cdots & r_{1\cdot k} \\ r_{2\cdot 1} & 1 & \cdots & r_{2\cdot k} \\ \vdots & \vdots & \vdots & \vdots \\ r_{k\cdot 1} & r_{k\cdot 2} & \cdots & 1 \end{pmatrix} \begin{pmatrix} p_1 \\ p_2 \\ \vdots \\ p_k \end{pmatrix} = \begin{pmatrix} r_1 \\ r_2 \\ \vdots \\ r_k \end{pmatrix} \tag{7}$$

σ_{x_i} is the standard deviation for the variable x_i , σ_y is the standard deviation for the variables y .

Solve all formula above, the following findings can be obtained:

Direct path coefficient: $p_i = \beta_i \frac{\sigma_{x_i}}{\sigma_y}$;

Indirectly path coefficient: P_{ij};

The correlation coefficient between Variables x_i and x_j: r_{ij};

The correlation coefficient between variables x_i and y: r_i;

Coefficient of determination: $d_i = p_i^2 = \beta_i^2 \frac{\sigma_{x_i}^2}{\sigma_y^2}$;

Common determination coefficient: $d_{i \cdot j} = 2 p_i \cdot p_j \cdot r_{i \cdot j} \qquad (i < j)$;

Coefficient of determination errors: $d_e = 1 - (\sum_i^k d_i + \sum_{i<j}^k d_{i \cdot j})$;

Or: $p_e = \sqrt{d_e}$;

Of which: $i, j = 1,2,\cdots,k$;

4. MODEL CALCULATION: DATA COLLECTION AND ANALYSIS

4.1 Data Preprocessing

Using SPSS and AMOS structural analysis software to fitting SEM equation, analyze the data of international dry bulk transport market from 2003 to 2008. The data mainly involved in model-based analysis are shown in Table 1. (data from《The Drewry Monthly》)

Table 1 The variable name

Initial	Variable name	Initial	Variable name	Initial	Variable name
NB	New building ship price	NH	Handymax-type new building price	NP	Panamax-type new building price
NC	Capesize-type new building price	SD	secondhand ship price	SH	Handymax-type secondhand price
SP	Panamax-type secondhand price	SC	Capesize-type secondhand price	HS	Handsize-type rate
HM	Handmax-type rate	PH	Panamax-type rate	CA	Capesize-type rate
FL	fleet	IN	inactive	OD	orderbook
OE	orderbook in fleet	CO	combis in oil	NO	new orders
SS	secondhand sales	DE	demolition	VO	voyage
TR	trip	PE	period	TS	transactions
SL	supply	TCR	terminal charge rates	CV	chartering volumes

First of all, pre-treat 1600 sets of data from dry bulk transport market in nearly 6 years through SPSS software, see mainly about the following statistics: mean, standard error for mean, 95% confidence interval for mean, 5% trim mean, median, standard deviation, variance, scope, quartile distance, kurtosis coefficient, standard error for kurtosis coefficient, skewness coefficient, standard error for skewness coefficient, minimum, maximum, range, the number of effective cases, missing value. Process singular value, and then standardize all

data.

Take variable IN (idle capacity of dry bulk fleet) for an example: To ensure the integrity and authenticity of data, conduct a preliminary investigation to verify data before data analysis, check and handle abnormal data. Explore statistical analysis of SPSS show intuitively the process of singular value to be explored, help to identify and deal with singular value. Under normal circumstances, the data either too large or too small may be the singular value or erroneous data, such data often have a greater impact on the results of the analysis, result in the untrue mastery of the overall features of the data. The main output data is in table 2.

Table 2 Output of Explore process

	mean	95% confidence interval for mean		5% trim mean	median	variance	
		Lower bond	Upper bond				
statistics	2.805	2.5762	3.0338	2.766	2.7	0.785	
Std.error	0.1143						
	standard deviation	minimum	maximum	range	quartile distance	skewness coefficient	kurtosis coefficient
statistics	0.885	1.3	5.3	4	1.170	0.729	0.123
Std.error						0.309	0.608

The distribution of the data analysis from Figure 2 shows that the data variable IN is in line with the normal distribution, data volatility is also good. Then stem and leaf analysis is carried out, using the stem and leaf analysis data, draw box map, show the data distribution more intuitively. In the singular value analysis chart box, rectangular box is the main body of the box diagram, the three lines said the variable value, 75, 50, 25 percentile respectively, and 50% variable of observations fall on the region, the tentacles straight line is a Central vertical line. On the cut-off line is a maximum ontology variable value; under the cut-off line is a minimum ontology variable value. Ontology gets rid of singular value and extreme is the variable value body. The markers of singular value used to be 0, has two sizes. On the top of tank with 0-point mark, the variable value is 1.5 times more than the margin between the 75th percentile and the 25th percentile. The variable value on the extreme point is more than 3-fold difference between the 75th percentile and the 25th percentile. Data of stem and leaf analysis shows in Table 3.

The emergence of singular value is the performance of external factors mutations of the international dry bulk cargo transport market, it might be the result of national related policy adjustments in import and export, and generated bias from the outcome of the data. In this paper, singular values are deleted regardless of what causes, in data processing and analysis process. After the delete processing, all data is standardized to eliminate the impact of indicator dimensionless and magnitude. After treatment, the data is put into AMOS software for further analysis. You can see data distribution in Figure 2, stem and leaf analysis boxes are shown in Figure 3.

Table 3 Data of stem and leaf analysis

frequency	Stem & leaf
2.00	1 . 34
7.00	1 . 5888999

18.00	2 . 00111122222234444
	4
11.00	2 . 67777888999
10.00	3 . 0111233344
3.00	3 . 568
5.00	4 . 00111
3.00	4 . 568
1.00 Extremes	(>=5.3)
Stem width:	1.00
Each leaf:	1 case(s)

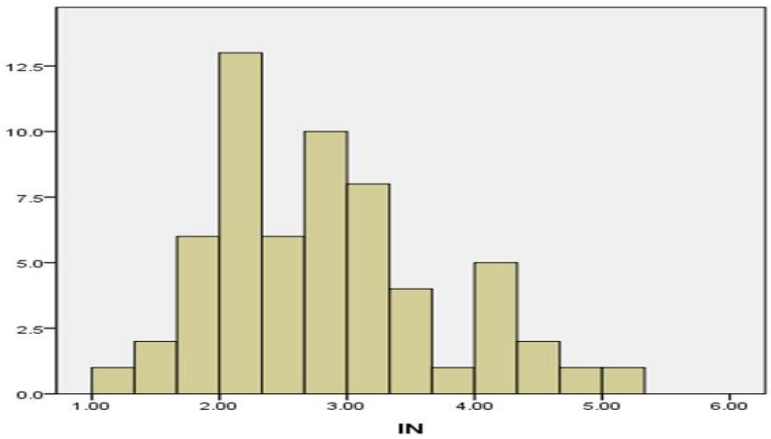

Figure 2 Distributing of date

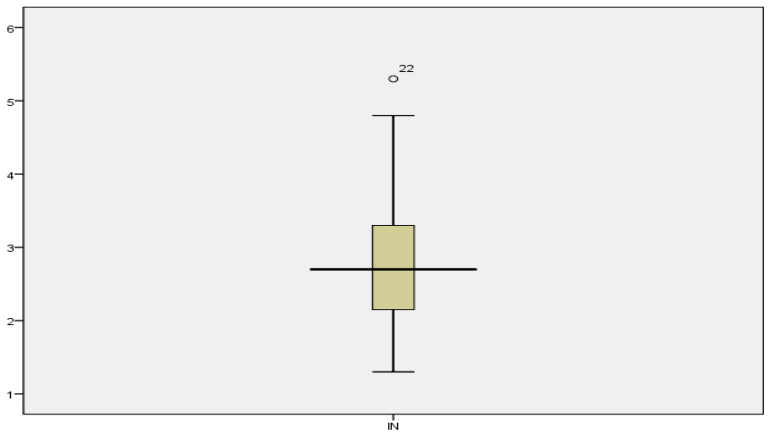

Figure 3 Chest of stem and leaf analysis

4.2 OUTPUT OF ESTIMATIONS AND TEST RESULTS

We established model of bulk cargo transport market in accordance with the actual situation, drew path map, identify and model parameters to identify the main with the rules, according to t, rank-order conditions and conditions on the model be revised, and then in the AMOS software for parameter estimation.

AMOS supplies five main available methods for LISREL, namely: ML (Maximum

Likelihood), GLS (General Least Squares), ULS (Unweighted Least Squares), SLS (Scale-free Least Squares) and AD (Asymptotically Distribution-free), in this article we use the Maximum Likelihood parameter estimates. The main model output data is in table 4.

Table 4 Output of the model data

Data name	Relations	Data name	Estimate	S.E.	C.R.	P
TCR	<---	CV	0.965	0.412	12.341	0.019
TCR	<---	SL	1.081	0.163	16.614	0.001
NB	<---	TCR	1.075	0.085	12.670	0.001
SD	<---	TCR	1.107	0.078	14.151	0.001
TS	<---	TCR	0.691	0.133	15.193	0.001
NO	<---	TS	1.000			
SS	<---	TS	0.772	0.244	13.161	0.002
DE	<---	TS	-0.856	0.248	-13.454	0.001
HS	<---	TCR	1.000			
HM	<---	TCR	0.977	0.102	19.618	0.001
PA	<---	TCR	0.930	0.108	18.585	0.001
CA	<---	TCR	1.012	0.096	10.515	0.001
NC	<---	NB	1.000			
NP	<---	NB	0.930	0.073	12.665	0.001
NH	<---	NB	0.932	0.073	12.784	0.001
SC	<---	SD	1.000			
SP	<---	SD	0.994	0.024	40.960	0.001
SH	<---	SD	1.003	0.016	63.241	0.001
FL	<---	SL	1.000			
IN	<---	SL	-0.171	0.183	-19.937	0.349
OD	<---	SL	1.403	0.180	17.791	0.001
PE	<---	CV	1.000			
TR	<---	CV	1.479	0.737	12.006	0.045
VO	<---	CV	-1.248	0.665	-18.755	0.061
OE	<---	SL	1.400	0.180	17.772	0.001
CO	<---	SL	0.562	0.182	13.083	0.002

In Table 4, "Estimate" is the path coefficients deduced and calculated by Path Analysis. For better identifying model, some values of Estimate is fixed to 1 as shown in " NO<--- TS"; "S.E." is the standard error (S.E.) of Estimate; "C.R." is the critical ratio of the value of Estimate and its corresponding S.E.. As well- known, if the estimated value of C.R. is larger 1.96, and then we call it significant correlation, while handling the random variable based on logarithm normal distribution. The values of C.R. are larger 1.96, which illustrate the got regression coefficient is unequal to zero significantly according to the significant test at level of 0.05. The value "P" is two-tail probability that the values of parameters in null hypothesis are zero, which shows that the regression coefficient of the proposed model is unequal to zero significantly. In all, the results in Table 4 show the proposed model fits very well.

Draw path diagram with AMOS Graphics soft, path coefficient will be reflected intuitively in

the path diagram, path analysis chart is shown in Figure 4.

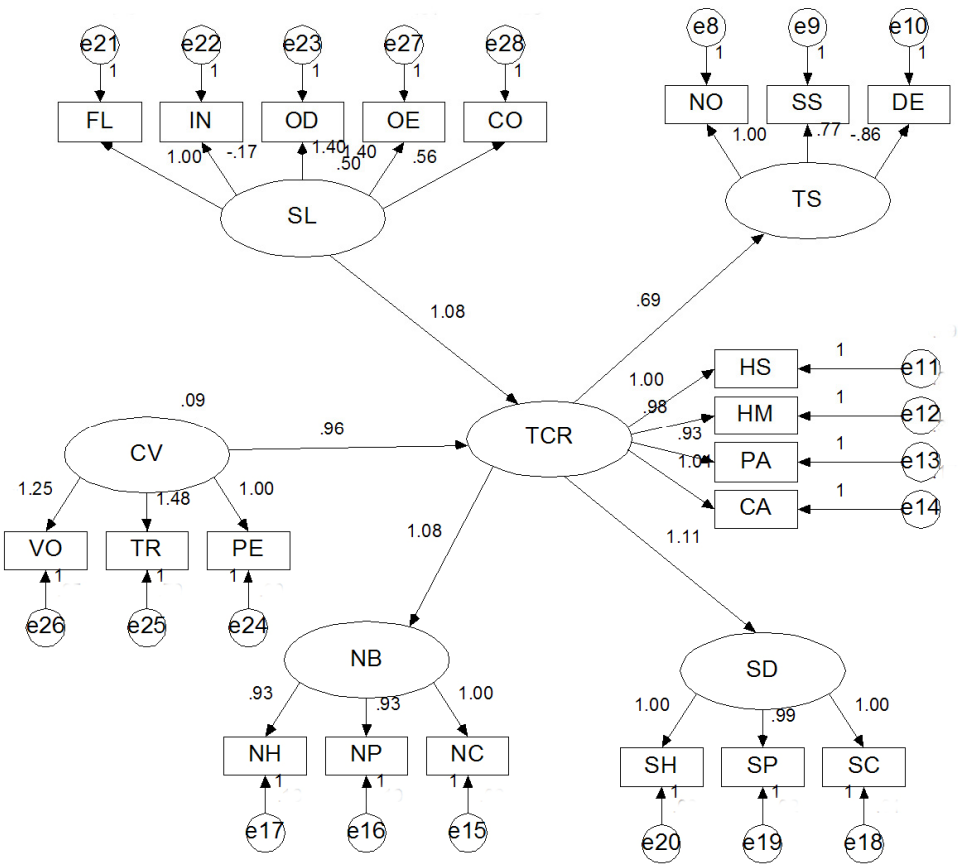

Figure 4 Figure of path analysis

5. CONCLUSION

(1) Structural equation model can be a very good calculation tool to analyze the influencing factors of international dry bulk freight.

(2) Analyzed from the perspective of supply and demand, dry bulk fleet supply market for freight transport is a greater impact, and its impact factor is 1.08, the impact factor of the transport needs of the market is 0.96, The results of above analysis shows that the international dry bulk cargo transport market is a seller's market, transport supply side is a larger initiative in the transport to take advantage of a balanced relationship. In the supply market, transport fleet orders and ship occupancy rates have the greatest influence, the impact factor is 1.40, and the impact factor of the volume of the fleet idle is -0.17, which is the minimum coefficient. It is easy to come to the conclusion that in the transport supply market, the ship usage and the frequency of use status are dominant position. In the transport demand market, the impact of voyage charter tonnage is 1.48, and it is the maximum coefficient, the impact of cyclical demand charter is the minimum.

(3) analyzing from the relationship between the transport market and ship market, dry bulk freight rates do a great influence on the new building and second-hand ship price, the impact coefficients are 1.08 and 1.11, and the new building and second-hand ship market have shown a common law that the impact factors of Capesize-type are bigger than that of Panamax-type and Handymax-type, we can see that dry bulk carrier in the ship market has a large-scale

trend. At the same time, contrast the new building, second-hand and demolition markets, the new building market has the maximum impact factor, its coefficient is 1.00, which anastomosis the hot market of the new building prices in recent years, in the ship market, the new building dry bulk has a dominant position.

ACKNOWLEDGEMENTS

The authors wish to express our thanks to the National Natural Science Foundation of China (No. 50578030) for its financial support.

REFERENCES

Cullinane, K. (1992) A short-term adaptive forecasting modal for BIFFEX speculation: a Box-Jenkins approach. **Maritime Policy &Management, Vol. 19, No. 2**, 91 - 114.

Veenstra, A. W. and Franses, P. H. (1995) A Co-integration Approach to Forecasting Freight Rates in the Dry Bulk Shipping Sector. **Transportation Research A, Vol. 31, No. 6**, 447-458.

Berg-Andreassen, J.A. (1996) Some properties of international maritime statistics. **Maritime Policy &Management, Vol. 23, No. 4**, 381-395.

Kavussanos, M.G. and Nomikos, N.K. (1999) The forward pricing function of the shipping freight futures market. **Journal of futures markets, Vol. 19, No. 3**, 353-376.

Kavussanos, M.G. and Alizadeh-M, A.H. (2001) The expectations hypothesis of the term structure and risk premiums in dry bulk shipping freight markets. **Journal of Transport Economics and Policy, Vol. 36, No. 2**, 267–304.

Yang, W.N. (1999) **Fluctuations in the international dry bulk freight study**. Master Thesis, Transportation Management College, Shanghai Maritime University.

He, Y. J. (2002) **The analysis of freight s fluctuation of international dry-cargo and the research of management strategy.** Master Thesis, Transportation Management College, Dalian Maritime University.

Lu, J. and Chen, Q. H. (2003) Study on fluctuation of Baltic Freight Index. **Journal of Dalian Maritime University, Vol. 29, No. 1**, 1-4.

Liu, J. L. and Shi, X. (2005) Research on co-integration in BIFFEX futures market and pricing model. **Journal of Dalian Maritime University, Vol. 31, No. 2,** 23-27.

Hau, K. T., Wen, Z. L. and Cheng, Z. J. (2005) Structural Equation Model and Its Applications. Educational Science Publishing House, Beijing.