Evaluation of Compliance of Dimensions and Selected Systems and Components of Customized Local Road Vehicles (CLRV) with Vehicle Regulations and Standards

Karl B. N. VERGEL [a], Rachel R. HABANA [b], Nonilo A. PEÑA [c],
Loreto C. CARASI [d], Albert G. MARIÑO [e], Alorna A. ABAO [f]

[a] *Institute of Civil Engineering, College of Engineering and National Center for Transportation Studies, University of the Philippines, Diliman, Quezon City, Philippines*
[a] *E-mail: karl.vergel@upd.edu.ph*
[b,c,d,e] *Philippine Council for Industry, Energy and Emerging Technologies Research and Development, Department of Science and Technology, Taguig City, Philippines*
[b] *E-mail: rrhabana@pcieerd.dost.gov.ph*
[c] *E-mail: napena@pcieerd.dost.gov.ph*
[d] *E-mail: lccarasi@pcieerd.dost.gov.ph*
[e] *E-mail: agmarino@pcieerd.dost.gov.ph*
[f] *National Center for Transportation Studies, University of the Philippines, Diliman, Quezon City, Philippines*
[f] *E-mail: alorna.abao@upd.edu.ph*

Abstract: A national survey of manufacturers of customized local road vehicles (CLRV) that includes jeepneys, local utility vehicles and Filcabs is conducted in 2012. The survey covered company profile, production data and specifications of vehicle models produced by the 54 local manufacturers. The levels of compliance of these CLRV vehicle models with the existing national and selected international vehicle regulations are assessed. Although the national basic dimensional standards are complied with, seatbelts and windshield glass, window material and installation of light and light signalling devices are observed to have lower compliance rates. Recommendations include institution of initial standards regarding internal dimensions of the CLRV derived from anthropometric measurements are proposed to improve safety, comfort and convenience. The methodology developed could be used as a guide for countries in East Asia in characterizing and standardization of their customized local road vehicles in their vehicle fleet.

Keywords: Customized Local Road Vehicle, Vehicle Standards, Utility Vehicle, Jeepney

1. INTRODUCTION

A customized local road vehicle (CLRV) is defined as a motor vehicle that is manufactured, assembled or rebuilt using new or remanufactured parts or a combination of both, driven or used upon highways for the purpose of transporting people and/or goods. The CLRV was defined first in Philippine National Standard (PNS) 2060:2007 which was promulgated in 2007 by the Bureau of Product Standards of the Department of Trade and Industry (DTI-BPS). The initial standard is a product of the Sub-Committee 28 (Customized Road Vehicles), under the Technical Committee 44 (Road Vehicles) of the DTI-BPS chaired by the UP National Center for Transportation Studies which started its standardization work in 2004. The standard

also classified the CLRV (utility vehicle category) into jeepney, owner-type jeepney, LUV (local utility vehicle), Filcab and jumbo jeepney and is also harmonized with UN-ECE regulation on classification of road vehicles through national standard, PNS 1891:2006 (Road vehicles – classification).

Customized local road vehicles are made of surplus/secondhand parts, systems and components. According to a study of Bacero and Vergel (2009) that focused on jeepneys, the share of raw materials averaged to 63% new (range of 50-80%) and surplus/secondhand averaged at around 37% (range of 20-50%). Based on the survey of 12 manufacturing firms in Metro Manila, Laguna, Rizal and Cavite, the mean average production was estimated at 2.9 units per month (ranging from 1 to 8 units per month).

The jeepney is classified and lumped into the utility vehicle (UV) category by the Land Transportation Office during registration. A jeepney that is assembled and registered for the first time, it usually follows the guidelines governing rebuilt vehicles (e.g. emission standards).

With respect to shares, trips made by public utility jeepneys in Metro Manila comprise 39% of the daily person trips according to the Metro Manila Urban Transportation Integration Study in 1996 or 55% of daily person trips using public transport. Historical data based on the UP-NCTS Databook on Philippine Transportation, the shares of jeepneys in daily person trips were 46% (1974), 59% (1980), 56% (1985) and 50% (1989). Shares of intra-regional person trips using the jeepney ranged from 22 to 36% in regional areas such as Quezon, Palawan and Panay based from roadside surveys conducted in 2006. According to the Land Transportation Franchising and Regulatory Board, in May 2013, there are 60,880 public utility jeepneys in Metro Manila and 228,534 units nationwide (56% of total for-hire vehicles). This could include local utility vehicle and jumbo jeepney types. As for Filcab, there are 18 units in Metro Manila and 20,249 units nationwide.

With this dependence of the country on customized local road vehicles used for public transport and the use of secondhand parts systems and components in their manufacturing, having standards to ensure compliance to roadworthiness, environment and riding comfort would be important.

The objectives of the paper are:

a) characterize manufacturing of customized local road vehicles in terms of profile, location, production and specifications of vehicle models produced;
b) assess the compliance of customized local road vehicles (utility vehicle category) with provisions of national and selected international vehicle regulations; and,
c) propose vehicle-related dimensions for the development of standards.

This research is the first attempt to characterize and determine the extent of manufacturing of the customized local road vehicles in the Philippines through a nationwide industry survey considering the absence of integrated official data from the transportation and trade and industry agencies. After assessment of compliance with vehicle regulations and standards, vehicle dimensional standards for the local CLRV fleet manufacturers based on anthropometric measurements are proposed.

2. NATIONAL SURVEY OF MANUFACTURERS AND ASSEMBLERS OF CLRV

2.1 Review of Existing Policies and Regulations

In the development of the questionnaire for the national survey of assemblers and manufacturers of CLRVs, the pertinent provisions of the following regulations were reviewed:

a) 1968 Vienna Conventions of the United Nations on Road Traffic and Road Signs and Signals (Presidential Decree No. 207 June 6, 1973 that ratified the Convention);
b) Republic Act No. 4136: Land Transportation and Traffic Code;
c) Revised Administrative Order on the New MVIS and Promulgating the Rules and Regulations in the Implementation Thereof (AO-2009-018), Land Transportation Office;
d) Act 3992;
e) Republic Act No. 8749 – Philippine Clean Air Act;
f) Republic Act No. 8750 – Seat Belt Act; and,
g) Republic Act No. 8794 – Motor Vehicle Users' Charge (MVUC) Law.

As for automotive products, the following road vehicle parts and components require mandatory product certification:

• PNS 06 – Lead-acid starter batteries
• PNS 25 – Pneumatic Tires
• PNS 34 – Rubber inner tubes for pneumatic tires
• PNS 1892 – Road vehicles – Safety-belts and restraint systems
• PNS 04 – Road vehicles – Automotive LPG components, containers
• PNS 34 – Safety glass for road vehicles

Under the Philippine Clean Air Act of 1999, the Environmental Management Bureau issues a certificate of conformity to emission standards of exhaust emission systems of new vehicles entering the market based on type approval test.

2.2 Development of National Survey Instrument

Based on review of basic laws and regulations in addition to selected international standards governing road vehicles, the survey instrument for the national survey of manufacturers and assemblers/rebuilders of customized local road vehicles (UV category) is developed to include: profile of enterprise, types of vehicles manufactured, production data, specifications of vehicles manufactured, vehicle assembly process, and automotive parts and sources. The manual for the instrument was developed as a guide for the enumerators in the regional offices of the Department of Science and Technology. The following is the outline of general items of the survey questionnaire.

Part 1 – Company Profile

Part 2 – Survey of Vehicle Specifications (For Each Manufactured Vehicle Model)

2.1: Vehicle Dimensions
2.2: Materials and Source (Vehicle Body)
2.3: Engine
2.4: Transmission
2.5: Fuel Tank
2.6: Electrical System
2.7: Wheels and Tires
2.8: Safety Devices
2.9: Audible Warning Devices
2.10: Ventilation System
2.11: Chassis
2.12: Windows
2.13: Windshield Wiper

2.14: Mufflers
2.15: Braking System
2.16: Vehicle Lighting and Light-signalling Devices
2.17: Metal Treatment Process (Description of Process)
2.18: Painting (Description of Process)

2.3 Summary of the National Survey

The survey of manufacturers and assemblers of customized local road vehicles was conducted from April to December of 2012. The survey collected information from 54 assemblers and manufacturers with the following profile based on the type of utility vehicle produced (Table 1).

Table 1. Profile of surveyed manufacturers and assemblers

Type of Utility Vehicle Manufactured/ Assembled	Number of Companies Surveyed
Jeepney	43
Local Utility Vehicle	8
Filcab	12
Jeepney and Filcab	1

Table 2 shows the geographical distribution of CLRV manufacturers and assemblers. For jeepneys, the surveyed companies are located mostly in Southern Luzon primarily in the Region 4 and the National Capital Region. For local utility vehicles, they are primarily found in Western Visayas (Region 6) while for Filcabs, they are found in Southern Luzon (Region 4 and NCR) and Central and Eastern Visayas (Regions 7 and 8).

Table 2. Location of surveyed manufacturers and assemblers

Type of CLRV (UV)	Location	Region	Number of Companies Surveyed
Jeepney	San Jose (Mindoro Occidental)	4-B	11
	Sto. Tomas (Pampanga)	4-A	6
	San Pablo City	4-A	4
	Tacloban City	8	2
	Boac (Marinduque)	4-B	2
	Valenzuela City	NCR	1
	Las Pinas City	NCR	1
	Talisay City	6	1
	Buenavista (Marinduque)	4-B	1
	Calapan City	4-B	1
	Puerto Princesa City	4-B	1
	Looc (Romblon)	4-B	1
Local Utility Vehicle	Iloilo City	6	2
	Davao City	11	1
	Bacolod City	6	1
	San Jose (Antique)	6	1
	Mandaue City	7	1
Filcab	Puerto Princesa City	4-B	5
	Mandaue City	7	3
	Dumaguete City	7	1
	Valenzuela City	NCR	1
	Tacloban City	8	1
	Calapan City	4-B	1
	San Pablo City	4-A	1

Table 3 shows the characteristics of the surveyed 54 CLRV models by classification. A total of 34 jeepney models, 9 LUV models and 11 Filcab models were covered in the national survey. The most common customized local road vehicles produced under the utility vehicle category include 22-seater jeepneys (M2), 20-seater and 24-seater local utility vehicles (M2) and 18-seater Filcab (M2) vehicles. It should be noted that the Filcab is classified as M1 in the Philippine National Standard (PNS) 2060:2007 – Customized Local Road Vehicle – Classification. According to the UN-ECE Consolidated Resolution on the Construction of Vehicles: "*Category M_1*": Vehicles used for the carriage of passengers and comprising not more than eight seats in addition to the driver's seat.

Table 3. Characteristics of surveyed CLRV models

	Passenger Seating Capacity	Number of Vehicles
Jeepney (M2)	22-seater	18
	26-seater	5
	30-seater	3
	28-seater	2
	18-seater	2
	20-seater	2
	25-seater	1
	27-seater	1
	Sub-Total (Jeepney)	**34**
Local Utility Vehicle (M2)	20-seater	2
	24-seater	2
	18-seater	1
	21-seater	1
	22-seater	1
	26-seater	1
	27-seater	1
	Sub-Total (Local Utility Vehicle)	**9**
Filcab (M2*)	18-seater	5
	12-seater	2
	15-seater	2
	16-seater	1
	17-seater	1
	Sub-Total (Filcab)	**11**

*the Filcab is classified as M1 in the Philippine National Standard (PNS) 2060:2007

Table 4 shows the engine models used by the manufacturers. Majority of the engines used are surplus or secondhand and only three engines were declared as brand new (Hyundai Theta, LPG) which is used in the manufacture of jeepneys. For jeepneys and local utility vehicles, majority are secondhand/surplus diesel-fueled engines (Isuzu 4BC2 and Mitsubishi 4DR5) with some using new Auto-LPG engines (Hyundai Theta) while secondhand gasoline-fueled engines (Suzuki) are used in the assembly of Filcab units.

Table 4. Engines used in the assembly of CLRV models

CLRV (UV) Class	Engine Used	Fuel Type	Number of Vehicle Models
Jeepney (M2)	Isuzu 4BC2	diesel	9
	Mitsubishi 4DR7	diesel	2
	Isuzu 4BE1	diesel	2
	Isuzu 6BF1	diesel	2
	Isuzu 4BG1	diesel	2
	Hyundai Theta	LPG	3
	Isuzu 4JB1	diesel	1
	Mitsubishi 4DR5	diesel	1
	Isuzu 4BA1	diesel	1
	Fuso 4D30	diesel	1
	Isuzu 4HF1	diesel	1
Local Utility Vehicle (M2)	Isuzu Elf 4HG1	diesel	1
	Isuzu 4JH1	diesel	1
	Mitsubishi 4DR7	diesel	1
	Mitsubishi 4DR5	diesel	1
Filcab	Suzuki/Suzuki 12-valve/Suzuki F6A	gasoline	8
	Suzuki SKRAM	gasoline	1
	Mitsubishi 4DR7	gasoline	1

2.4 Monthly and Annual Production

The production of customized local road vehicles by classification is summarized in the table below (Table 5). The average monthly production of is 2 to 9 units per month. The average production of the jeepneys is the lower compared to local utility vehicles and Filcab vehicles.

Table 5. Monthly production of CLRV

CLRV (UV) Class	Mean production per month	Maximum production per month	Number of samples of manufacturers/ assemblers
Jeepney	2.0	10	29
Local Utility Vehicle (LUV)	9.0	17	4
Filcab	4.6	15	8

Table 6 shows the estimated annual production of customized local road vehicles by class based on the total units sold in the last 3 years. The mean annual production of Filcabs has been significantly higher than those of LUV and Jeepney in the last three years.

Table 6. Estimated annual production of CLRV

CLRV (UV) Class	Mean production (last 3 years)	Maximum production (3 years)	Mean production per year	No. of samples of manufacturers/ assemblers
Jeepney	14.1	50	4.7	26
Local Utility Vehicle (LUV)	56.7	300	18.9	3
Filcab	152.5	300	58.3	4

3. COMPARISON OF CLRV DIMENSIONS WITH PROVISIONS OF NATIONAL VEHICLE REGULATIONS

3.1 Vehicle Classification and Mass

The Bureau of Product Standards (DTI-BPS) of the Philippines adopted the internationals standard in 2000 and promulgated the Philippine National Standard PNS 1891: 2006 (Classification and Definition of Power-Driven Vehicles and Trailers) under the 16 April 1999 Consolidated Resolution on the Construction of Vehicles of the United Nations Economic and Social Council (UN-ECE). In 2007, the DTI-BPS promulgated the Philippine National Standard PNS 2060: 2007 (Customized Local Road Vehicles – Classification) that harmonizes classification of customized local road vehicles with UN-ECE classification. In 8 September 2010, the Department of Transportation and Communications (DOTC) issued Department Order DO 2010-32 (Harmonization of Motor Vehicle Classifications of Land Transportation Office and Land Transportation Franchising and Regulatory Board). The order attempted to fit the current vehicle classification of the transport regulatory agencies with classification of PNS 1891: 2000 of the DTI-BPS.

According to the UN-ECE Consolidated Resolution on the Construction of Vehicles particularly on Section 2 (Classification of power-driven vehicles and trailers):

• Category M - Power-driven vehicles having at least four wheels and used for the carriage of passengers

• "Category M1": Vehicles used for the carriage of passengers and comprising not more than eight seats in addition to the driver's seat.

• "Category M2": Vehicles used for the carriage of passengers, comprising more than eight seats in addition to the driver's seat, and having a maximum mass not exceeding 5 tonnes.

Table 7 shows the results of the comparison of surveyed CLRV specifications with the UN-ECE definition of power-driven vehicles. As jeepneys and LUVs passed, all Filcab vehicle models failed to comply due to the number of passengers carried that exceeded 8. Survey results have shown that Filcabs are designed by assemblers/rebuilders to carry 12 to 16 passengers.

Table 7. Comparison of surveyed CLRV specifications with UN-ECE vehicle classification (No. of Passengers) and mass (5,000 kg)

CLRV (UV) Class	No. of Sample Vehicle Models with Data	No. of Vehicle Models Complying	No. of Vehicle Models Not Complying	Percentage of Compliance
Jeepney	27	27	0	100%
Local Utility Vehicle	8	8	0	100%
Filcab	11	0	11	0%

3.2 Vehicle Length and Width

According to Section 7.4.2.1.1.1 (Maximum Length), Section 7.4.2.1.1.2 (Maximum Width) and Section 7.4.2.1.1.3 (Maximum Height) of Revised Administrative Order on the New MVIS and Promulgating the Rules and Regulations in the Implementation Thereof (AO-2009-018) of the Land Transportation Office, the maximum length of a two-axle passenger vehicle should be 11 m., the maximum width should be 2.5 m. and the maximum height for all vehicles should be 4.0 m., with dimensions shown in Figure 1. Table 8 shows the comparison of CLRV specifications of the surveyed vehicle models with the maximum

length, maximum width and maximum height as required by the Land Transportation Office (LTO) Administrative Order (AO) No. 2009-018. Overall, the surveyed vehicle models complied with the overall vehicle length, width and height regulations.

Table 8. Comparison of surveyed CLRV specifications with maximum length, height and width as per LTO AO-2009-018

CLRV (UV) Class	No. of Sample Vehicle Models with Data	No. of Vehicle Models Complying	No. of Vehicle Models Not Complying	Percentage of Compliance
Maximum Length				
Jeepney	44	44	0	100%
Local Utility Vehicle	9	9	0	100%
Filcab	13	13	0	100%
Maximum Width				
Jeepney	42	42	0	100%
Local Utility Vehicle	9	9	0	100%
Filcab	13	13	0	100%
Maximum Height				
Jeepney	43	43	0	100%
Local Utility Vehicle	9	9	0	100%
Filcab	13	13	0	100%

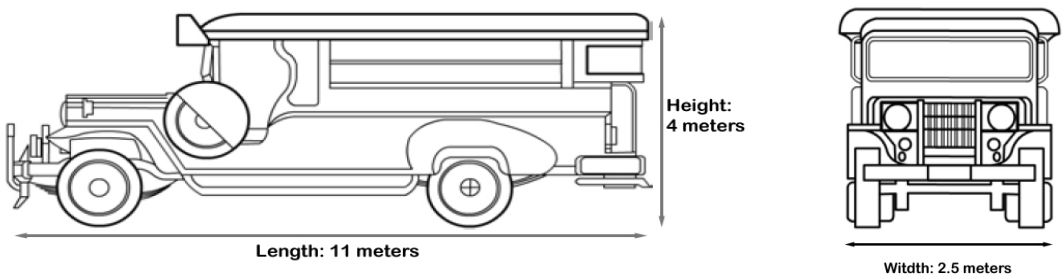

Figure 1. Vehicle length and height regulations

3.3 Seat Width and Depth

According to Section 7.4.2.24 (Driver and Passenger Seat) of the Revised Administrative Order on the New MVIS (AO-2009-018), the seat for one passenger is at minimum of 35 cm. wide (width) by 60 cm. long (depth), with dimensions shown in Figure 2.

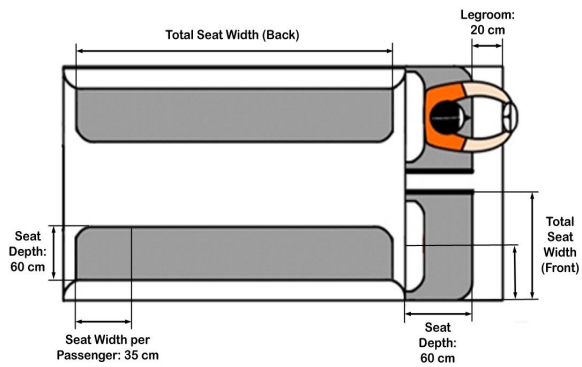

Figure 2. Minimum seat depth and seat width regulations

3.3.1 Rear passenger seat width and depth

Table 9 shows the comparison of CLRV specifications of the rear passenger seats of the surveyed vehicle models with the minimum passenger seat width and depth as required by the Land Transportation Office (LTO) Administrative Order (AO) No. 2009-018. As the rear passenger seat depth was measured directly, the average rear passenger seat width was derived from the measurement of the total rear passenger seat width divided by the result of the following:

$$rear\ \ passenger\ \ width = \frac{quoted\ \ passenger\ \ seating\ \ capacity - 2}{2} \tag{1}$$

With respect to minimum seat width, the surveyed CLRV vehicle models have compliance rates ranging from 55% to 73% with jeepneys having the lowest rate of compliance (55%). As to the minimum seat depth, all vehicles surveyed failed to comply.

Table 9. Comparison of surveyed CLRV specifications of the rear passenger seats with minimum passenger seat width and depth as per LTO AO-2009-018

CLRV (UV) Class	No. of Sample Vehicle Models with Data	No. of Vehicle Models Complying	No. of Vehicle Models Not Complying	Percentage of Compliance
Minimum Seat Width (35 cm.)				
Jeepney	31	17	14	55%
Local Utility Vehicle	9	6	3	67%
Filcab	11	8	3	73%
Minimum Seat Depth (60 cm.)				
Jeepney	39	0	39	0%
Local Utility Vehicle	9	0	9	0%
Filcab	9	0	12	0%

3.3.2 Front Passenger Seat Width and Depth

There are usually two front seat passengers and the seat width is derived by dividing the total width of front passenger seat by two. Table 10 shows the comparison of CLRV specifications of the front passenger seats of the surveyed vehicle models with the minimum passenger seat width and depth as required by the LTO Administrative Order No. 2009-018.

Table 10. Comparison of surveyed CLRV specifications of the front passenger seats with minimum passenger seat width and depth as per LTO AO-2009-018

CLRV (UV) Class	No. of Sample Vehicle Models with Data	No. of Vehicle Models Complying	No. of Vehicle Models Not Complying	Percentage of Compliance
Minimum Seat Width (35 cm.)				
Jeepney	39	36	3	92%
Local Utility Vehicle	9	9	0	100%
Filcab	12	8	4	67%
Minimum Seat Depth (60 cm.)				
Jeepney	39	11	28	28%
Local Utility Vehicle	9	1	8	11%
Filcab	13	6	7	46%

Higher rates of compliance have been observed compared to the rear passenger seats, with rates ranging from 67% to 100%. Similarly, higher rates of compliance have been observed with respect to seat depth.

3.3.3 Driver Seat Width and Depth

Table 11 shows the comparison of CLRV specifications of the driver seat of the surveyed vehicle models with the minimum driver seat width and depth as required by the Land Transportation Office (LTO) Administrative Order (AO) No. 2009-018. Higher rates of compliance have been observed compared to the rear passenger seats, with rates ranging from 62% to 100%. Similarly, higher rates of compliance have been observed with respect to minimum seat depth.

Table 11. Comparison of surveyed CLRV specifications of the driver seat with minimum passenger seat width and depth as per LTO AO-2009-018

CLRV (UV) Class	No. of Sample Vehicle Models with Data	No. of Vehicle Models Complying	No. of Vehicle Models Not Complying	Percentage of Compliance
Minimum Seat Width (35 cm.)				
Jeepney	41	38	3	93%
Local Utility Vehicle	9	9	0	100%
Filcab	13	8	5	62%
Minimum Seat Depth (60 cm.)				
Jeepney	41	5	36	12%
Local Utility Vehicle	9	0	9	0%
Filcab	13	7	6	54%

3.4 Leg Room

According to Section 7.4.2.24 (Driver and Passenger Seat) of the Land Transportation Office (LTO) Administrative Order (AO) No. 2009-018, the distance of one end of the seat to the backseat (leg room) shall be 20 cm. at minimum, with dimensions shown in Figure 3.

Table 12 shows the comparison of CLRV specifications of the driver seat of the surveyed vehicle models with the minimum leg room as required by the Land Transportation Office (LTO) Administrative Order (AO) No. 2009-018. Compliance rates have been 100% except for the local utility vehicle class.

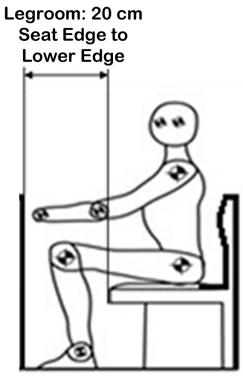

Figure 3. Minimum leg room regulations

Table 13 shows the comparison of CLRV specifications of the driver seat of the surveyed vehicle models with the minimum leg room as required by the Land Transportation Office (LTO) Administrative Order (AO) No. 2009-018. Compliance rates are lower compared to front seats.

Table 12. Comparison of surveyed CLRV specifications of the front passenger aeat with minimum leg room as per LTO AO-2009-018

CLRV (UV) Class	No. of Sample Vehicle Models with Data	No. of Vehicle Models Complying	No. of Vehicle Models Not Complying	Percentage of Compliance
Jeepney	30	30	0	100%
Local Utility Vehicle	8	6	2	75%
Filcab	9	9	0	100%

Table 13. Comparison of surveyed CLRV specifications of the driver seat with minimum leg toom as per LTO AO-2009-018

CLRV (UV) Class	No. of Sample Vehicle Models with Data	No. of Vehicle Models Complying	No. of Vehicle Models Not Complying	Percentage of Compliance
Jeepney	37	35	2	95%
Local Utility Vehicle	13	12	1	92%
Filcab	9	7	2	78%

4. COMPARISON OF CLRV SYSTEMS AND COMPONENTS WITH PROVISIONS OF NATIONAL AND INTERNATIONAL VEHICLE REGULATIONS

A system means vehicle equipment, such as brakes, anti-pollution devices or interior fittings, which is essential part of the vehicle and usually cannot be detached as a separate part. A component means a device, such as lamp, which is intended to be part of the vehicle and can be detached from it, mounted on it and type approved independently of the vehicle.

4.1 Seatbelts

Section 7.4.2.2 (Seatbelts and Anchorage) of Land Transportation Office Administrative Order No. 2009-018 provides that all motor vehicles shall be equipped with seatbelts in accordance with Republic Act No. 8750 (Seat Belt Law). Section 4 (Mandatory Use of Seat Belts) requires driver and front seat passengers to use seat belt devices. Section 7 (Provisions for Seat Belt) requires car manufacturers, assemblers and distributors to ensure that seat belt devices are properly installed before the distribution and sale of the said vehicles. Manufacturers, assemblers and distributors of jeepneys may install a pelvic restraint or lap belt only in the driver's and front seat passengers' seats and this shall be considered as substantial compliance with the requirements of RA 8750. Table 14 shows the compliance rates on the existence of driver and front passenger seatbelts.

Table 14. Compliance of surveyed CLRV vehicle models with Republic Act No. 8750 (Seat Belt Law) and LTO AO-2009-018

CLRV (UV) Class	No. of Sample Vehicle Models with Data	No. of Vehicle Models Complying	No. of Vehicle Models Not Complying	Percentage of Compliance
Existence of Driver Seat Belt				
Jeepney	30	30	0	100%
Local Utility Vehicle	7	7	0	100%
Filcab	2	2	0	100%
Existence of Front Passenger Seat Belt				
Jeepney	30	29	1	97%
Local Utility Vehicle	6	6	0	100%
Filcab	2	2	0	100%

4.2 Parking Brake

Section 7.4.2.21.9 of the Land Transportation Office Administrative Order No. 2009-018 provides that the parking brake shall be operated mechanically and capable of holding the motor vehicle stationary on a dry paved road. The 1968 Vienna Convention on Road Traffic (Chapter I) also provides for a parking brake function for motor vehicles. Table 15 shows the results of the survey of CLRV models and their compliance with the parking brake requirement. Few vehicle models of the jeepney and LUV class are still not complying with this requirement.

Table 15. Compliance of surveyed CLRV vehicle models with parking brake provision in the Vienna Convention on Road Traffic and LTO AO-2009-018

CLRV (UV) Class	No. of Sample Vehicle Models with Data	No. of Vehicle Models Complying	No. of Vehicle Models Not Complying	Percentage of Compliance
Existence of Parking Brake				
Jeepney	34	30	4	88%
Local Utility Vehicle	6	4	2	67%
Filcab	8	8	0	100%

4.3 Windshield Glass and Window Material

Section 7.4.2.12 (Windshield/Window Glass) of Land Transportation Office Administrative Order No. 2009-018 provides that windshield/window glass shall be made of substance whose transparency does not deteriorate; these shall be such that they do not cause any appreciable distortion of object seen through the windscreen and that in case of breakage, the driver still has a sufficient clear view of the road.

4.3.1 Windshield Glass

Table 16 shows the type of materials used in windshield glass installed in customized local road vehicles. Around 72% of the vehicle models utilize laminated, safety and tempered glass materials. According to Philippine National Standard PNS 130: 2004 (Safety glass for road vehicles - Specifications): Laminated glass is defined as two or more pieces of glass held together by an intervening layer or layers of suitable plastic material. It will crack and break under sufficient impact, but large fragments should not scatter. Safety glass is defined is a

glass product so constructed, treated or combined with other materials to reduce the likelihood of injury to persons by objects from exterior sources or by these safety glasses when they may be cracked or broken. Tempered safety glass is defined as a single piece of flat or bent glass that has been heat-treated and rapidly cooled to produce compressively stressed layers at the surfaces, such that when it breaks will disintegrate into small, granular fragments with no large jagged edges compared to annealed glass. There are two types of tempered safety glass: fully tempered safety (toughened) glass and zone-tempered glass: a) Fully tempered safety glass or toughened glass is defined as a type of tempered safety glass which when broken will disintegrate into small uniform granular fragments. This type is to be used for the windowpanes other than windscreens including backlites; and, b) Zone-tempered glass is defined as a type of tempered safety glass so treated that in the event of breakage, a part of fragments will break into somewhat larger and symmetrical proportions to secure a partial field of vision necessary for driving. These symmetrical fragments are usually located in the central area of the glass. This type is used for the windscreen of road vehicles.

Table 16. Windshield glass materials of CLRV (UV) models

Type of Glass	Number of Vehicle Models (Share of Total, %)
Laminated	15 (39%)
Safety Glass	9 (24%)
Tempered Glass	7 (18%)
Not Tempered/Not Laminated/Not Safety Glass	7 (18%)
Total	38

4.3.2 Window Material

Table 17 shows the type of material used in windows installed in customized local road vehicles. Most vehicle models still utilize plastic sheet materials. Section 7.4.2.12 (Windshield/Window Glass) of Land Transportation Office Administrative Order No. 2009-018 provides for the existence of a windshield/window glass and a significant share of the CLRV models have no window glass.

Table 17. Window materials of CLRV (UV) models

Type of Material	Number of Vehicle Models (Share of Total in %)
Jeepney	
Tempered Glass	6 (18%)
Plastic (fixed)	2 (6%)
Plastic (sliding)	11 (33%)
Open/Grill Only	14 (42%)
Local Utility Vehicle	
Plastic sheet	5 (100%)
Filcab	
Glass	3 (33%)
Plastic (fixed)	4 (44%)
Open/Grill Only	2 (22%)

4.4 Front Bumper

Table 18 shows the type of material used in front bumpers installed in customized local road vehicles. Many vehicle models in the jeepney and Filcab classes use steel/metal materials in their front bumpers.

Table 18. Front bumper materials of CLRV (UV) models

Type of Material	Number of Vehicle Models	Share of Total
Jeepney		
Steel/Stainless Steel, Pipe/Galvanized/ GI Sheet/GI Angle Bar	30	86%
Fiberglass	1	3%
Plastic	4	11%
Local Utility Vehicle		
Steel/Stainless Steel, Pipe/Galvanized/GI Sheet/ GI Angle Bar	3	38%
Fiberglass	3	38%
Plastic	2	25%
Filcab		
Steel/Stainless Steel, Pipe/Galvanized/GI Sheet/GI Angle Bar	6	75%
Fiberglass	0	0%
Plastic	2	25%

4.5 Chassis

Table 19 shows the sourcing of chassis of customized local road vehicles. Majority of the jeepney vehicle models have their chassis outsourced while many local utility vehicles and Filcabs do in-house fabrication of chassis.

Table 19. Source of chassis of CLRV (UV) models

Source	Number of Vehicle Models	Share of Total
Jeepney		
Outsourced	22	69%
In-house	10	31%
Local Utility Vehicle		
Outsourced	1	17%
In-house	5	83%
Filcab		
Outsourced	0	0%
In-house	5	71%
Original Japan	2	29%

4.6 Installation of Light and Light-Signalling Devices in CLRVs and Comparison with International Standards

The installation of light and light signalling devices in CLRV models has also been surveyed and compared with provisions of ISO 303 (Road vehicles – Installation of lighting and light signalling devices for motor vehicles and their trailers) and UN-ECE Regulation No. 48 (Uniform provisions concerning the approval of vehicles with regard to the installation of lighting and light-signalling devices). Figure 4 shows the dimensions related to light and light signaling devices installed in front of the CLRVs.

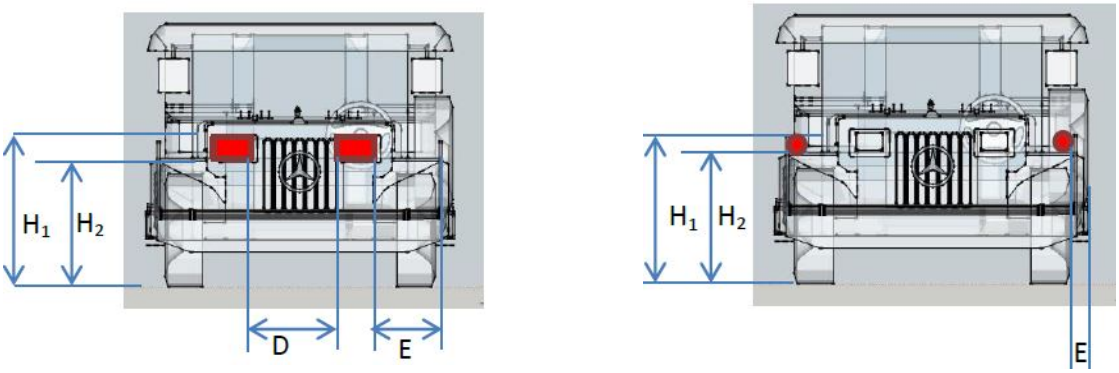

Figure 4. Dimensions related to the installation of headlamps (left) and front position and front direction indicator lamps (right)

Figure 5 shows the dimensions related to light and light signaling devices installed at the rear of the CLRVs.

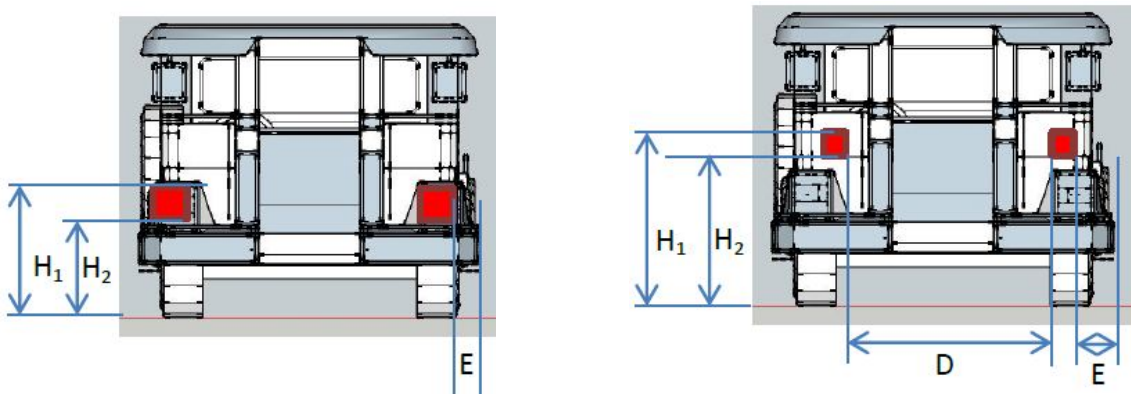

Figure 5. Dimensions related to the installation of rear retro-reflectors (left) and rear direction indicator lamps (right)

Table 20 shows the survey results on most common lights and light signalling devices and their installations on CLRV vehicle models with relatively high share of non-compliance when compared with international standards such as ISO 303 and UN-ECE Regulation No. 48.

Table 20. Share of CLRV (UV) models not complying with installation of light and light signaling devices as per ISO 303 and UN-ECE Regulation No. 48

Light/Light-Signalling Device	Position of Installation	Percent of Vehicle Models Not Complying
Headlamps	maximum distance from edge of vehicle (E) ≤ 400 mm	34%
	minimum distance between two lamps (D) ≥ 600 mm	43%
Front position lamps	maximum distance from edge of vehicle (E) ≤ 400 mm	60% (upper)
		56% (lower)
Front direction indicator lamps	maximum distance from edge of vehicle (E) ≤ 400 mm	62% (upper)
		16% (lower)
Rear direction indicator lamps	color should be amber	27%
	minimum distance between two lamps (D) ≥ 600 mm	9%
Rear retro-reflectors	existence	50%

Most headlamps are installed too close to each other and too far away from the vehicle edge. The installation of front position lamps has also been observed to exceed the maximum distance from the edge of the vehicle. CLRV vehicle models have been observed to have two front direction indicator lamps: upper and lower lamps. The upper direction indicator lamps have been observed to have higher non-compliance rate than the lower lamps. Rear direction lamps were observed to have different colors other than amber. Half of the vehicle models surveyed had no retro-reflectors.

5. RECOMMENDATIONS OF STANDARDS ON VEHICLE DIMENSIONS

The recommendations on vehicle dimensions are based on ergonomic design for the purposes of safety and for convenience and comfort of the intended passengers. Anthropometric measurements are inputs to ergonomic design and this paper relied heavily on the study of Del Prado-Lu (2007) entitled "Anthropometric measurement of Filipino manufacturing workers" which is the first comprehensive anthropometric measurement of Filipino manufacturing workers in the country consisting of 1,805 Filipino workers in 31 manufacturing industries. Specifically, the anthropometric measurement for sitting was used as the main reference in the development of vehicle dimensions especially for the passenger cabin.

5.1 Minimum Floor-to-Ceiling Height

Figure 6 shows the related dimensions to the passenger cabin. Based on the anthropometric measurements for sitting conducted by Del Prado-Lu (2007), the following are the median measurements for Filipino males:

$$\text{sitting height} = 85.0\ cm.$$

$$\text{knee height (sitting)} = 50.0\ cm.$$

Adding a 10-cm allowance for headroom, the minimum floor-to-ceiling height is given by:

$$floor-to-ceiling\ height = 85\ cm. + 50\ cm. + 10\ cm = 145\ cm.$$

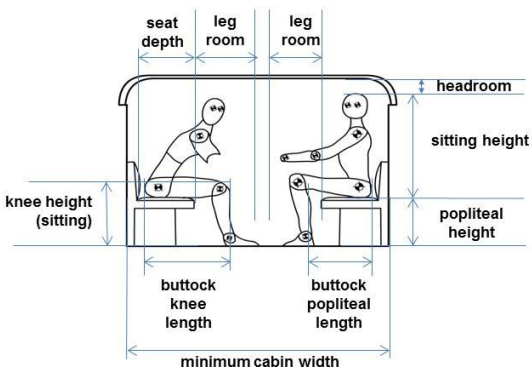

Figure 6. Passenger cabin dimensions

5.2 Minimum Cabin Width

Based on the anthropometric measurements for sitting conducted by Del Prado-Lu (2007), the following is the median measurement for Filipino males:

$$\text{buttock knee length} = 55.0\ cm.$$

The minimum leg room according to the Land Transportation Office is 20 cm. The minimum cabin width (backrest to backrest) is given by:

$$cabin\ width = (2 \times leg\ room) + (2 \times buttock\ knee\ length) \quad (2)$$

Therefore, cabin width is given by:

$$cabin\ width = (2 \times 20\ cm.) + (2 \times 55\ cm.) = 150\ cm.$$

5.3 Minimum Seat Height, Seat Width and Seat Depth

5.3.1 Minimum seat height

The popliteal height (sitting) is the height of the back of the knee above the floor. This dimension is pertinent to the establishment of appropriate seat heights, need for foot rests and position of foot controls. Based on the anthropometric measurements for sitting conducted by Del Prado-Lu (2007), the following are the median measurements for Filipinos:

$$median\ popliteal\ height\ (male) = 43.0\ cm.$$

$$median\ popliteal\ height\ (female) = 40.5\ cm.$$

The minimum seat height from the floor of the vehicle cabin is set with a minimum of 40 cm. and maximum of 45 cm.

5.3.2 Minimum seat width

According to Section 7.4.2.24 (Driver and Passenger Seat) of Land Transportation Office Administrative Order No. 2009-018, the seat for one passenger is at minimum of 35 cm. wide (width). Based on the anthropometric measurements for standing and sitting conducted by Del Prado-Lu (2007), the following are the related measurements for Filipinos:

shoulder width, standing (male) = 44 *cm.*

shoulder width, standing (female) = 40 *cm.*

median hip breadth, sitting (male) = 35 *cm.*

median hip breadth, sitting (female) = 36 *cm.*

The shoulder breadth or shoulder width establishes the lateral clearance between persons who may be required to sit side by side.

The minimum seat width set by the Land Transportation Office may need updating since the buttock widths have increased considerably. The current regulation of 35 cm. represents only the 5th percentile in the 2007 anthropometric measurements. It is therefore recommended to set the minimum seat width to 35 cm.

5.3.3 Minimum seat depth

According to Section 7.4.2.24 (Driver and Passenger Seat) of Land Transportation Office Administrative Order No. 2009-018, the seat for one passenger is at minimum of 60 cm. long (depth).

The buttock-to-popliteal length or buttock popliteal length is the dimension that defines the seat pan depth of chairs. The popliteal is the point at the back of the leg where the knee bends.

Based on the anthropometric measurements for sitting conducted by Del Prado-Lu (2007), the following are the median measurements for Filipinos:

median buttock popliteal length (male) = 46 *cm.*

median buttock popliteal length (female) = 45 *cm.*

The minimum seat depth set by the Land Transportation Office may need updating. The current regulation of 60 cm. could be too high as 51-52 cm. represent the 95th percentile in the 2007 anthropometric measurements. It is therefore recommended to set the minimum seat depth to 45 cm.

5.4 Maximum Stepboard Height and Minimum Stepboard Width

5.4.1 Maximum stepboard height

Based on the foot anthropometric measurements conducted by Del Prado-Lu (2007), the following are the median measurement for Filipino females:

step height (female) = 25 *cm.*

It is therefore recommended to set the maximum stepboard height to 25 cm.

5.4.2 Minimum stepboard width

Based on the foot anthropometric measurements conducted by Del Prado-Lu (2007), the following is the median measurement for Filipino males:

foot length (male) = 25.5 *cm.*

It is therefore recommended to set the minimum stepboard width to 25 cm.

6. CONCLUSIONS AND RECOMMENDATIONS

The study characterized the manufacturing of customized local road vehicles in the Philippines in terms of profile, location, production and specifications of vehicle models produced. A company survey and vehicle specification survey instrument is developed where 54 manufacturers have been covered by the national survey. Most common CLRV models being produced are the 22-seater jeepneys, 20 and 24-seater local utility vehicles and 18-seater Filcab. Average production is found to be 2 to 9 units per month.

Dimensions, selected systems, components of customized local road vehicles are assessed and a number of vehicle models being produced are not compliant with national vehicle regulations as well as other standards.

Specifically, it has been observed that Filcab vehicle models do not generally comply with the UN-ECE Vehicle Classification in terms of the maximum number of passengers. All CLRV models complied with the overall vehicle length, width and height regulations of the Land Transportation Office (LTO). Compliance rates range from 55% to 73% with respect to minimum seat width of the LTO with jeepneys having the lowest rate of compliance (55%). As to the minimum seat depth, all vehicles surveyed failed to comply. Higher rates of compliance have been observed for the front passenger and driver seat width and depth. As for the minimum leg room, compliance rates are high except for some local utility vehicle models.

CLRV models generally comply with the minimum requirements of the Seat Belt Law. With respect to provision of parking brake, few vehicle models of the jeepney and local utility vehicle classes are still not complying with this requirement. Around 72% of the

vehicle models utilize laminated, safety and tempered glass materials which are prescribed by the Philippine National Standard. The LTO provides for the existence of a windshield/window glass and significant share of the CLRV models have no window glass (side window) based on the survey. As materials used in front bumpers, many vehicle models in the jeepney and Filcab classes use steel or metal. Majority of the jeepney vehicle models have their chassis outsourced while many local utility vehicles and Filcabs do in-house fabrication of chassis.

With respect to installation of light and light-signalling devices, headlamps, front position lamps, front and rear direction indicator lamps installed in CLRV models have been observed to exceed the maximum distance from the edge of the vehicle.

Vehicle-related dimensions summarized in Table 21 are proposed for the development of initial road vehicle standards for customized local road vehicles. Vehicle dimensions comprise the second set of road vehicle standards related to the customized local road vehicles after the development of the first standard related to vehicle classification of CLRVs in 2007. The development of these standards would help in the modernization of the paratransit-type public transport.

Table 21. Summary of proposed vehicle-related dimensional standards

	Vehicle-Related Dimension	Value
1.	Minimum Floor-to-Ceiling Height	145 cm.
2.	Minimum Cabin Width	150 cm.
3.	Minimum Seat Height	40 cm.
4.	Maximum Seat Height	45 cm.
5.	Minimum Seat Width	40 cm.
6.	Minimum Seat Depth	45 cm.
7.	Maximum Stepboard Height	25 cm.
8.	Minimum Stepboard Width	25 cm.

The methodology developed for the national survey of manufacturers and assessment of compliance of vehicle dimensions, systems and components with local and international vehicle regulations, and recommendation for the standardization of dimensions could be used as a guide for developing countries in East Asia in characterizing and standardization of their customized local road vehicles in their vehicle fleet.

ACKNOWLEDGEMENTS

Acknowledgment is given to Philippine Council for Industry, Energy and Emerging Technologies Research & Development (DOST-PCIEERD) for the use of the data from the study entitled “Development of Customized Local Road Vehicle Standards” which is funded by the Department of Transportation and Communications through its Special Vehicle Pollution Control Fund. Acknowledgment is also given to Mr. Ernesto B. Abaya, University Extension Specialist of the National Center for Transportation Studies (UP-NCTS) of the University of the Philippines Diliman (UP Diliman) who helped in the surveys, instruments and vehicle drawings, Mr. Franz Flores, student assistant of the Institute of Civil Engineering of the UP Diliman who assisted in the survey instrument, and to Mr. Raphael Christian Dela Cruz and Ms. Abhigael Dawn Marabut, students of the B.S. Civil Engineering program of the Institute of Civil Engineering of UP Diliman who helped in the processing of survey data. Special acknowledgment is also given to Dr. Jose Regin F. Regidor, Professor of the Institute of Civil Engineering of UP Diliman/UP-NCTS and Engr. Raul C. Sabularse, Deputy Executive Director of DOST-PCIEERD for their valuable inputs.

REFERENCES

Creus, F. (2010) Motor Vehicle Certification and Regulations, Scoping Seminar on Capacity Building of Personnel Including Institutional Strengthening for Motor Vehicle Type Approval System, 5-6 March 2009, University Hotel, University of the Philippines Diliman.

Ocampo, R. B. (1981) *A Comparative Report on Low-Cost Transport in Five Cities in Asia*. Metro Manila.

Republic Act No. 4136: Land Transportation and Traffic Code

1968 Vienna Convention of the United Nations on Road Traffic, United Nations Economic Commission for Europe, the United Nations (UN-ECE)

Presidential Decree No. 207 June 6, 1973, Ratifying the 1968 Vienna Conventions of the United Nations on Road Traffic and Road Signs and Signals, Respectively.

Revised Administrative Order on the New MVIS and Promulgating the Rules and Regulations in the Implementation Thereof (AO-2009-018), Land Transportation Office

Philippine National Standard (PNS) 2060: 2007 Customized local road vehicles-classification, Bureau of Product Standards/Department of Trade and Industry.

Human Factors Branch, Georgia Tech Research Institute, Section 7.2.2 Structural anthropometry, http://ergotmc.gtri.gatech.edu/dgt/Design_Guidelines/hndch703.htm

Del Prado-Lu, J. (2007) Anthropometric measurement of Filipino manufacturing workers, *International Journal of Industrial Ergonomics 37*, 497–503.

Bacero, R., Vergel, K. (2009) Assessment of jeepney's components, systems and separate technical units for the development of standards. *Proceedings of the 17th Annual Conference of the Transportation Science Society of the Philippines*.

Philippine National Standard (PNS) 130: 2004 Safety glass for road vehicles - Specifications, Bureau of Product Standards/Department of Trade and Industry. OCS 43.040.5;81.040.30; 03.120.30.

Philippine National Standard (PNS) 1892:2000 Road vehicles - Safety-belts and restraint systems - Specification, Bureau of Product Standards/Department of Trade and Industry. Amendment 01:2002, ICS 43.040.60

Department of Transportation and Communications and Japan International Cooperation Agency (1999) Metro Manila Urban Transportation Integration Study, Final Report.

ISO 303 Road vehicles — Installation of lighting and light signalling devices for motor vehicles and their trailers, Second edition, 2002-09-01, ISO 303:2002(E), International Organization for Standardization (ISO), Geneva, Switzerland.

Inland Transport Committee, Economic Commission for Europe (1999) Classification and Definition of Power-Driven Vehicles and Trailers, TRANS/WP.29/ 78/Rev.1/Amend.2, 16 April 1999.

UN-ECE Regulation 48 – Uniform provisions concerning the approval of vehicles with regard to the installation of lighting and light-signalling devices, United Nations Economic Commission for Europe, E/ECE/324, E/ECE/TRANS/505, Regulation No. 48, Rev.1/Add.47/Rev.6.